Washing Machine

User manual

WW9*J5**6**/WW8*J5**6**/WW7*J5**6**

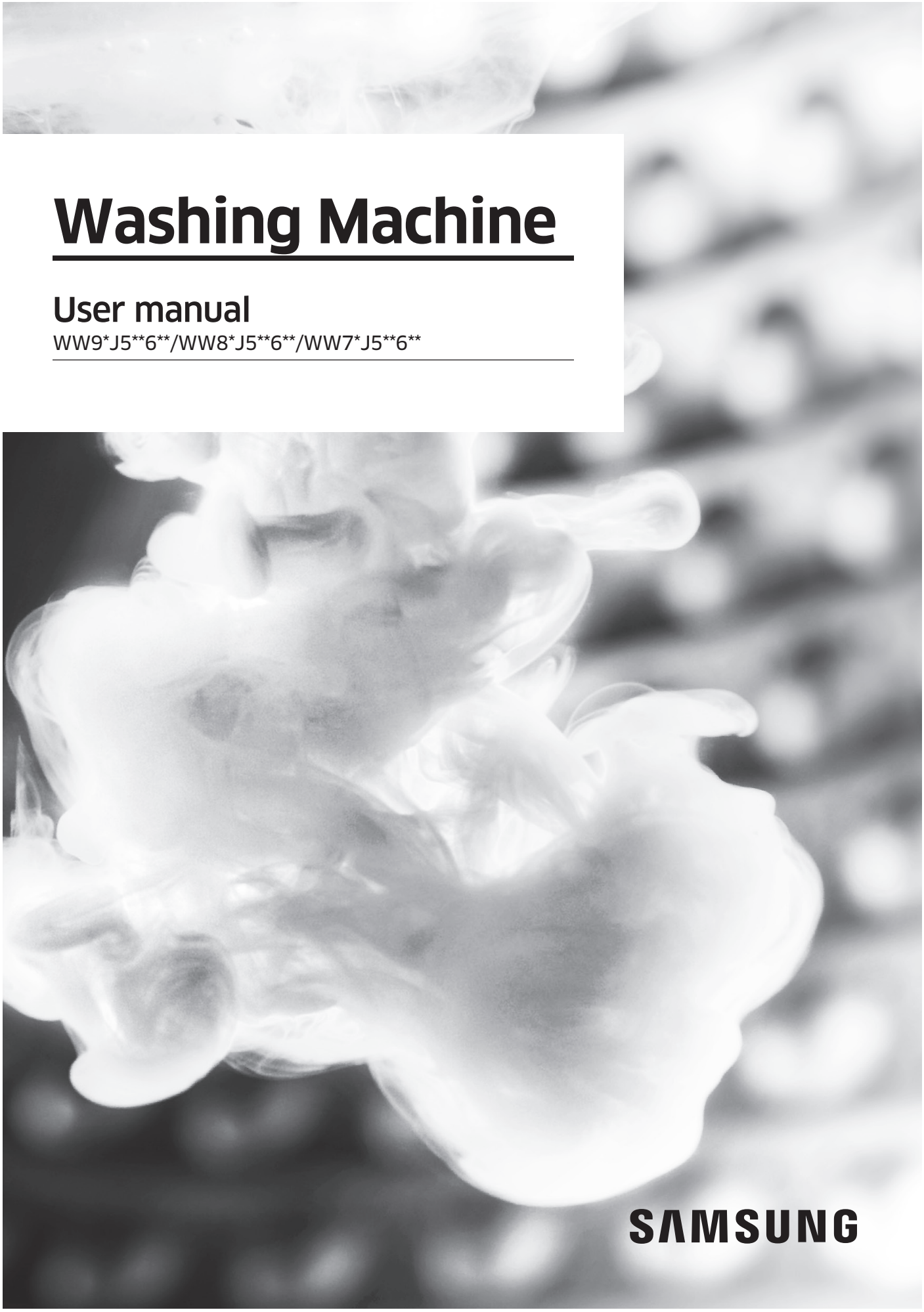

SAMSUNG

Untitled-1 1 2017-06-26 3:16:59

Contents

Contents

Safety information 4

What you need to know about the safety instructions 4
Important safety symbols 4
Important safety precautions 5
Critical installation warnings 6
Installation cautions 8
Critical usage warnings 8
Usage cautions 10
Critical cleaning warnings 13
Instructions about the WEEE 14

Installation 15

What's included 15
Installation requirements 17
Step-by-step installation 19

Before you start 26

Initial settings 26
Laundry guidelines 26
Detergent drawer guidelines 29

Operations 33

Control panel 33
Simple steps to start 35
Cycle overview 36
Settings 40

Maintenance 41

Eco drum clean 41
Smart Check 42
Emergency drain 43
Cleaning 44
Recovery from freezing 47
Care against an extended time of disuse 47

Untitled-1 2 2017-06-26 3:17:00

Troubleshooting 48

Checkpoints 48
Information codes 52

Specifications 55

Fabric care chart 55
Protecting the environment 56
Specification sheet 57
Information of main washing cycles 65

Untitled-1 3 2017-06-26 3:17:00

Safety information

Congratulations on your new Samsung washing machine. This manual contains important information on the installation, use and care of your appliance. Please take some time to read this manual to take full advantage of your washing machine's many benefits and features.

What you need to know about the safety instructions

Please read this manual thoroughly to ensure that you know how to safely and efficiently operate the extensive features and functions of your new appliance. Please store the manual in a safe location close to the appliance for future reference. Use this appliance only for its intended purpose as described in this instruction manual.

Warnings and Important Safety Instructions in this manual do not cover all possible conditions and situations that may occur. It is your responsibility to use common sense, caution and care when installing, maintaining and operating your washing machine.

Because the following operating instructions cover various models, the characteristics of your washing machine may differ slightly from those described in this manual and not all warning signs may be applicable. If you have any questions or concerns, contact your nearest service centre or find help and information online at www.samsung.com.

Important safety symbols

What the icons and signs in this user manual mean:

⚠ **WARNING**

Hazards or unsafe practices that may result in **severe personal injury, death and/or property damage.**

⚠ **CAUTION**

Hazards or unsafe practices that may result in **personal injury and/or property damage.**

NOTE

Indicates that a risk of personal injury or material damage exists.

Untitled-1 4 2017-06-26 3:17:00

These warning signs are here to prevent injury to yourself and others.
Please follow them explicitly.
After reading this manual, store it in a safe place for future reference.

Read all instructions before using the appliance.

As with any equipment that uses electricity and moving parts, potential hazards exist. To safely operate this appliance, familiarize yourself with its operation and exercise care when using it.

Important safety precautions

⚠ WARNING

To reduce the risk of fire, electric shock, or injury to persons when using your appliance, follow basic precautions, including the following:

1. This appliance is not to be used by persons (including children) with reduced physical, sensory or mental capabilities, or lack of experience and knowledge, unless they have been given supervision or instruction concerning use of the appliance by a person responsible for their safety.
2. For use in Europe: This appliance can be used by children aged from 8 years and above and persons with reduced physical, sensory or mental capabilities or lack of experience and knowledge if they have been given supervision or instruction concerning use of the appliance in a safe way and understand the hazards involved. Children shall not play with the appliance. Cleaning and user maintenance shall not be made by children without supervision.
3. Children should be supervised to ensure that they do not play with the appliance.

Untitled-1 5 2017-06-26 3:17:00

Safety information

4. If the supply cord is damaged, it must be replaced by the manufacturer, its service agent or similarly qualified persons in order to avoid a hazard.
5. The new hose-sets supplied with the appliance are to be used and old hose-sets should not be reused.
6. For appliances with ventilation openings in the base, a carpet must not obstruct the openings.
7. For use in Europe: Children of less than 3 years should be kept away unless continuously supervised.
8. CAUTION: In order to avoid a hazard due to inadvertent resetting of the thermal cut-out, this appliance must not be supplied through an external switching device, such as a timer, or connected to a circuit that is regularly switched on and off by the utility.

Critical installation warnings

⚠ **WARNING**

The installation of this appliance must be performed by a qualified technician or service company.

- Failure to do so may result in electric shock, fire, an explosion, problems with the product, or injury.

The appliance is heavy, therefore take care when lifting it.

Plug the power cord into a wall socket that meets local electrical specifications. Use the socket for this appliance only, and do not use an extension cord.

- Sharing a wall socket with other appliances using a power strip or extending the power cord may result in electric shock or fire.
- Ensure that the power voltage, frequency, and current are the same as those of the product specifications. Failure to do so may result in electric shock or fire. Plug the power plug into the wall socket firmly.

Remove all foreign substances such as dust or water from the power plug terminals and contact points using a dry cloth on a regular basis.

- Unplug the power plug and clean it with a dry cloth.

Untitled-1 6 2017-06-26 3:17:00

- Failure to do so may result in electric shock or fire.

Plug the power plug into the wall socket so that the cord is running towards the floor.

- If you plug the power plug into the socket in the opposite direction, the electric wires within the cable may be damaged and this may result in electric shock or fire.

Keep all packaging materials out of the reach of children as these may be dangerous.

- If a child places a bag over its head, it may suffocate.

When the appliance, power plug or power cord is damaged, contact your nearest service centre.

This appliance must be properly grounded.

Do not ground the appliance to a gas pipe, plastic water pipe, or telephone line.

- This may result in electric shock, fire, an explosion, or problems with the product.
- Never plug the power cord into a socket that is not grounded correctly and make sure that it is in accordance with local and national regulations.

Do not install this appliance near a heater or any inflammable material.

Do not install this appliance in a humid, oily or dusty location, or in a location exposed to direct sunlight or water (rain drops).

Do not install this appliance in a location exposed to low temperatures.

- Frost may cause the tubes to burst.

Do not install this appliance in a location where gas may leak.

- This may result in electric shock or fire.

Do not use an electric transformer.

- This may result in electric shock or fire.

Do not use a damaged power plug, damaged power cord, or loose wall socket.

- This may result in electric shock or fire.

Do not pull or excessively bend the power cord.

Do not twist or tie the power cord.

Do not hook the power cord over a metal object, place a heavy object on the power cord, insert the power cord between objects, or push the power cord into the space behind the appliance.

- This may result in electric shock or fire.

Do not pull the power cord when unplugging the power plug.

- Unplug the power plug by holding the plug.
- Failure to do so may result in electric shock or fire.

Untitled-1 7 2017-06-26 3:17:00

Safety information

This appliance should be positioned so that the power plug, the water supply taps, and the drain pipes are accessible.

Installation cautions

⚠ **CAUTION**

This appliance should be positioned in such a way that the power plug is easily accessible.

- Failure to do so may result in electric shock or fire due to electric leakage.

Install your appliance on a solid, level floor that can support its weight.

- Failure to do so may result in abnormal vibrations, movement, noise, or problems with the product.

Critical usage warnings

⚠ **WARNING**

If the appliance is flooded, turn off the water & power supplies immediately and contact your nearest service centre.

- Do not touch the power plug with wet hands.
- Failure to do so may result in electric shock.

If the appliance generates a strange noise, a burning smell, or smoke, unplug the power plug immediately and contact your nearest service centre.

- Failure to do so may result in electric shock or fire.

In the event of a gas leak (such as propane gas, LP gas, etc.), ventilate immediately without touching the power plug. Do not touch the appliance or power cord.

- Do not use a ventilating fan.
- A spark may result in an explosion or fire.

Do not let children play in or on the washing machine. In addition, when disposing of the appliance, remove the washing machine door lever.

- If trapped inside the product, children may suffocate to death.

Make sure to remove the packaging (sponge, styrofoam) attached to the bottom of the washing machine before using it.

Do not wash items contaminated with gasoline, kerosene, benzene, paint thinner, alcohol or other inflammable or explosive substances.

- This may result in electric shock, fire, or an explosion.

Untitled-1 8 2017-06-26 3:17:00

Do not open the washing machine door by force while it is operating (high-temperature washing/drying/spinning).

- Water flowing out of the washing machine may result in burns or cause the floor to be slippery. This may result in injury.
- Opening the door by force may result in damage to the product or injury.

Do not insert your hand under the washing machine while an operation is in progress.

- This may result in injury.

Do not touch the power plug with wet hands.

- This may result in electric shock.

Do not turn the appliance off by unplugging the power plug while an operation is in progress.

- Plugging the power plug into the wall socket again may cause a spark and result in electric shock or fire.

Do not let children or the infirm use this washing machine without proper supervision. Do not let children climb in or onto the appliance.

- This may result in electric shock, burns or injury.

Do not insert your hand or a metal object under the washing machine while it is operating.

- This may result in injury.

Do not unplug the appliance by pulling the power cord. Always grip the plug firmly and pull it straight out of the outlet.

- Damage to the power cord may cause a short-circuit, fire and/or electric shock.

Do not attempt to repair, disassemble, or modify the appliance yourself.

- Do not use a fuse (such as copper, steel wire, etc.) other than a standard fuse.
- When the appliance needs to be repaired or reinstalled, contact your nearest service centre.
- Failure to do so may result in electric shock, fire, problems with the product, or injury.

If the water supply hose comes loose from the water tap and floods the appliance, unplug the power plug.

- Failure to do so may result in electric shock or fire.

Unplug the power plug when the appliance is not being used for long periods of time or during a thunder or lightning storm.

- Failure to do so may result in electric shock or fire.

If any foreign substance enters into the appliance, unplug the power plug and contact your nearest Samsung Customer Service.

- This may result in electric shock or fire.

Untitled-1 9 2017-06-26 3:17:00

Safety information

Do not let children (or pets) play in or on your washing machine. The washing machine door does not open easily from the inside and children may be seriously injured if trapped inside.

Usage cautions

⚠ **CAUTION**

When the washing machine is contaminated by a foreign substance such as detergent, dirt, food waste, etc., unplug the power plug and clean the washing machine using a damp, soft cloth.

- Failure to do so may result in discolouration, deformation, damage, or rust.

The front glass may be broken by a strong impact. Take care when using the washing machine.

- If the glass is broken, it may result in injury.

After a water supply failure or when reconnecting the water supply hose, open the water tap slowly.

Open the water tap slowly after a long period of non-use.

- The air pressure in the water supply hose or the water pipe may damage a product part or result in a water leak.

If a draining error occurs during an operation, check if there is a draining problem.

- If the washing machine is used when it is flooded because of a draining problem, it may result in electric shock or fire.

Insert the laundry into the washing machine completely so that the laundry does not get caught in the door.

- If laundry gets caught in the door, it may result in damage to the laundry or the washing machine, or result in a water leak.

Turn the water supply off when the washing machine is not being used.

- Ensure that the screws on the water supply hose connector are properly tightened.

Ensure that the rubber seal and front door glass are not contaminated by a foreign substance (e.g. waste, thread, hair, etc.).

- If a foreign substance is caught in the door or the door is not completely closed, it may cause a water leak.

Open the water tap and check if the water supply hose connector is firmly tightened and that there is no water leak before using the product.

Untitled-1 10 2017-06-26 3:17:00

- If the screws on the water supply hose connector are loose, it may result in a water leak.

The product you have purchased is designed for domestic use only.

Using the product for business purposes qualifies as a product misuse. In this case, the product will not be covered by the standard warranty provided by Samsung and no responsibility can be attributed to Samsung for malfunctions or damages resulting from such misuse.

Do not stand on the appliance or place objects (such as laundry, lighted candles, lighted cigarettes, dishes, chemicals, metal objects, etc.) on the appliance.

- This may result in electric shock, fire, problems with the product, or injury.

Do not spray volatile material such as insecticide onto the surface of the appliance.

- As well as being harmful to humans, this may result in electric shock, fire or problems with the product.

Do not place objects that generate electromagnetic fields near the washing machine.

- This may result in injury due to a malfunction.

Water drained during a high-temperature wash or drying cycle is hot. Do not touch the water.

- This may result in burns or injury.

Do not wash, spin, or dry water-proof seats, mats, or clothing (*) unless your appliance has a special cycle for washing these items.

(*): Woollen bedding, rain covers, fishing vests, ski pants, sleeping bags, diaper covers, sweat suits, and bicycle, motor cycle and car covers, etc.

- Do not wash thick or hard mats even if the washing machine mark is on the care label. This may result in injury or damage to the washing machine, walls, floor, or clothing due to abnormal vibrations.
- Do not wash throw rugs or doormats with rubber backing. The rubber backing may come off and stick to inside the drum, and this may result in malfunction such as a drainage error.

Do not operate the washing machine when the detergent drawer is removed.

- This may result in electric shock or injury due to a water leak.

Do not touch the insides of the drum during or just after drying as it is hot.

- This may result in burns.

Do not insert your hand into the detergent drawer.

- This may result in injury as your hand may be caught by the detergent input device.

Untitled-1 11 2017-06-26 3:17:00

Safety information

- The liquid detergent guide (applicable models only) is not used for powder detergent. Remove the guide when using powder detergent.

Do not place any objects (such as shoes, food waste, animals) other than laundry into the washing machine.

- This may result in damage to the washing machine, or injury and death in the case of pets due to the abnormal vibrations.

Do not press the buttons using sharp objects such as pins, knifes, fingernails, etc.

- This may result in electric shock or injury.

Do not wash laundry contaminated by oils, creams or lotions usually found in skincare shops or massage clinics.

- This may cause the rubber seal to become deformed and result in a water leak.

Do not leave metal objects such as safety pins, hair pins or bleach in the drum for long periods of time.

- This may cause the drum to rust.
- If rust starts appearing on the surface of the drum, apply a (neutral) cleansing agent to the surface and use a sponge to clean it. Never use a metal brush.

Do not use dry cleaning detergent directly and do not wash, rinse, or spin laundry contaminated by dry cleaning detergent.

- This may result in spontaneous combustion or ignition due to the heat from the oxidation of the oil.

Do not use water from water cooling/heating devices.

- This may result in problems with the washing machine.

Do not use natural hand-washing soap for the washing machine.

- If it hardens and accumulates inside the washing machine, it may result in problems with the product, discolouration, rust, or bad odours.

Place socks and brassieres in a washing net and wash them with the other laundry.

Do not wash large laundry items such as bedding in the washing net.

- Failure to do so may result in injury due to abnormal vibrations.

Do not use hardened detergent.

- If it accumulates inside the washing machine, it may result in a water leak.

Make sure that the pockets of all the clothing items to be washed are empty.

- Hard, sharp objects such as coins, safety pins, nails, screws, or stones can cause extensive damage to the appliance.

Do not wash clothing with large buckles, buttons or other heavy metal objects.

Untitled-1 12 2017-06-26 3:17:00

Sort the laundry by colour on the basis of its colorfastness and select the recommended cycle, water temperature and additional functions.

- This may result in discolouration or fabric damage.

Take care that children's fingers are not caught in the door when you close it.

- Failure to do so may result in injury.

Critical cleaning warnings

⚠ **WARNING**

Do not clean the appliance by spraying water directly onto it.

Do not use a strong acidic cleaning agent.

Do not use benzene, thinner or alcohol to clean the appliance.

- This may result in discolouration, deformation, damage, electric shock or fire.

Before cleaning or performing maintenance, unplug the appliance from the wall socket.

- Failure to do so may result in electric shock or fire.

Untitled-1 13 2017-06-26 3:17:00

Safety information

Instructions about the WEEE

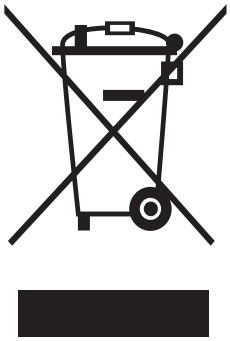

Correct Disposal of This Product (Waste Electrical & Electronic Equipment)

(Applicable in countries with separate collection systems)

This marking on the product, accessories or literature indicates that the product and its electronic accessories (e.g. charger, headset, USB cable) should not be disposed of with other household waste at the end of their working life. To prevent possible harm to the environment or human health from uncontrolled waste disposal, please separate these items from other types of waste and recycle them responsibly to promote the sustainable reuse of material resources.

Household users should contact either the retailer where they purchased this product, or their local government office, for details of where and how they can take these items for environmentally safe recycling.

Business users should contact their supplier and check the terms and conditions of the purchase contract. This product and its electronic accessories should not be mixed with other commercial wastes for disposal.

For information on Samsung's environmental commitments and product specific regulatory obligations e.g. REACH visit: samsung.com/uk/aboutsamsung/samsungelectronics/corporatecitizenship/data_corner.html

Untitled-1 14 2017-06-26 3:17:00

Installation

Follow these instructions carefully to ensure proper installation of the washing machine and to prevent accidents when doing laundry.

What's included

Make sure all the parts are included in the product package. If you have a problem with the washing machine or the parts, contact a local Samsung customer centre or the retailer.

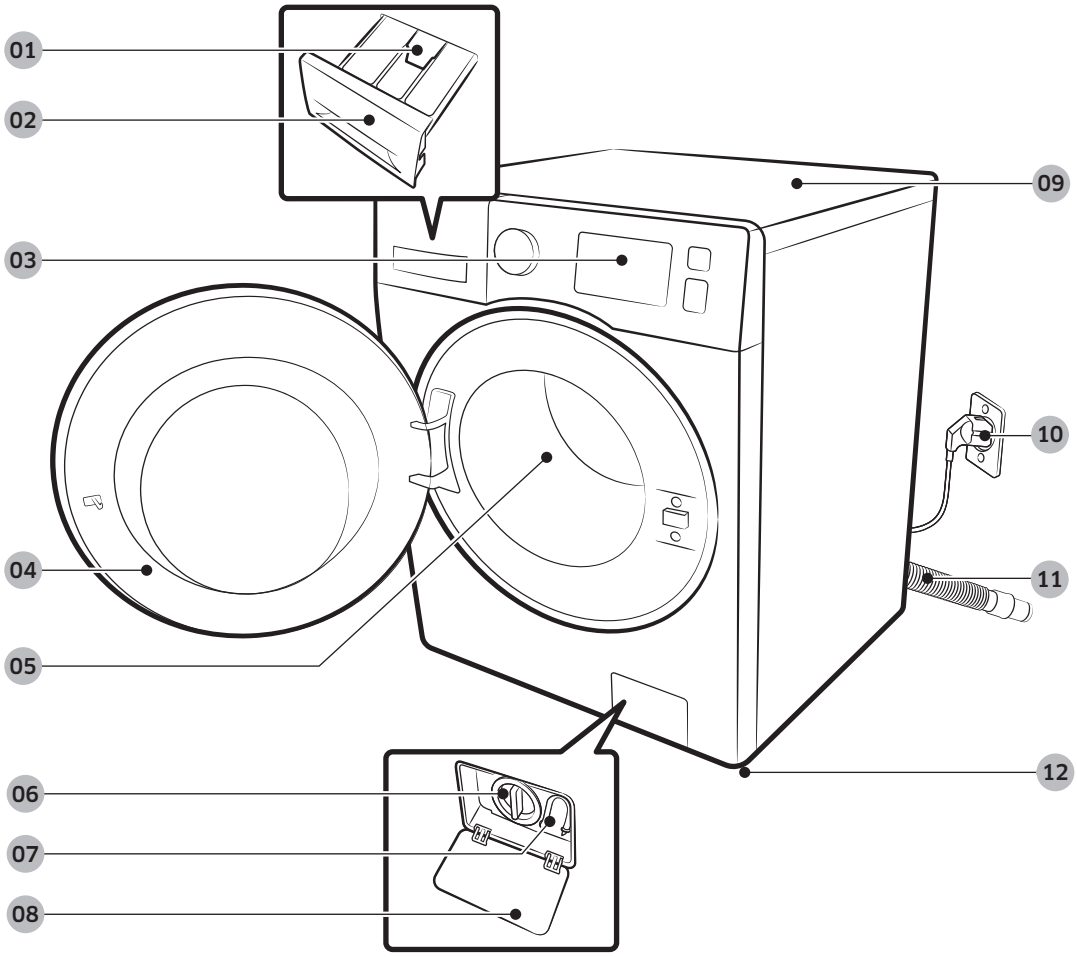

01 Release lever	**02** Detergent drawer	**03** Control panel
04 Door	**05** Drum	**06** Pump filter
07 Emergency drain tube	**08** Filter cover	**09** Worktop
10 Power plug	**11** Drain hose	**12** Levelling feet

Untitled-1 15 2017-06-26 3:17:01

Installation

Spanner

Bolt caps

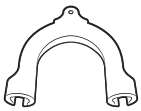

Hose guide

Cold water hose

Hot water hose

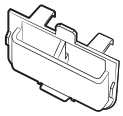

Liquid detergent guide

NOTE

- Bolt caps: The provided number (3 to 6) of bolt caps depends on the model.
- Hot water hose: Applicable models only.
- Liquid detergent guide: Applicable models only.

Untitled-1 16 2017-06-26 3:17:01

Installation requirements

Electrical supply and grounding

- AC 220-240 V / 50 Hz fuse or circuit breaker is required.
- Use an individual branch circuit specific to the washing machine.

To ensure proper grounding, the washing machine comes with a power cord featuring a three-prong grounding plug for use in a properly installed and grounded outlet.

Check with a qualified electrician or service person if you are not sure about the grounding.

Do not modify the provided plug. If it does not fit the outlet, call a qualified electrician to install a proper outlet.

⚠ **WARNING**

- Do NOT use an extension cord.
- Use only the power cord that comes with the washing machine.
- Do NOT connect the ground wire to plastic plumbing, gas lines, or hot water pipes.
- Improperly connected grounding conductors may cause electric shock.

Water supply

A proper water pressure for this washing machine is between 50 kPa and 800 kPa. Water pressure less than 50 kPa may cause the water valve not to close completely. Or, it may take longer to fill the drum, causing the washing machine to turn off. Water taps must be within 120 cm from the rear of the washing machine so that the provided inlet hoses reach the washing machine.

To reduce the risk of leaks:

- Make sure water taps are easily accessible.
- Turn off the taps when the washing machine is not in use.
- Check for any leaks at the water inlet hose fittings on a regular basis.

⚠ **CAUTION**

Before using the washing machine for the first time, check all connections at the water valve and taps for any leaks.

Drain

Samsung recommends a standpipe in height of 60-90 cm. The drain hose must be connected through the hose clip to the standpipe, and the standpipe must fully cover the drain hose.

Untitled-1 17 2017-06-26 3:17:01

Installation

Flooring

For best performance, the washing machine must be installed on a solid floor. Wood floors may need to be reinforced to minimize vibration and/or unbalanced loads. Carpeting and soft tile surfaces are not a good resistance to vibrations and may cause the washing machine to move slightly during the spin cycle.

⚠ **CAUTION**

Do NOT install the washing machine on a platform or a poorly supported structure.

Water temperature

Do not install the washing machine in areas where water may freeze as the washing machine always retains some water in its water valves, pumps, and/or hoses. Frozen water left in the connection parts may cause damage to belts, the pump, and other components of the washing machine.

Alcove installation

Minimum clearance for stable operation:

Sides	25 mm
Top	25 mm
Rear	50 mm
Front	550 mm

If both the washing machine and a dryer are installed in the same location, the front of the alcove must have at least a 550 mm unobstructed air opening. Your washing machine alone does not require a specific air opening.

Untitled-1 18 2017-06-26 3:17:01

Step-by-step installation

STEP 1 Select a location

Location requirements:

- Solid, level surface without carpeting or flooring that may obstruct ventilation
- Away from direct sunlight
- Adequate room for ventilation and wiring
- The ambient temperature is always higher than the freezing point (0 °C)
- Away from a heat source

STEP 2 Remove the shipping bolts

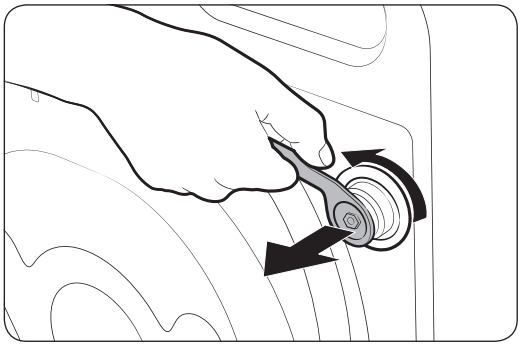

Unpack the product package and remove all shipping bolts.

1. Loosen all shipping bolts on the rear of the machine using the supplied spanner.

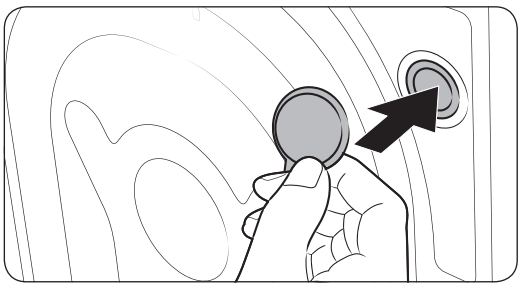

2. Fill the holes with the supplied plastic bolt caps.
   Keep the shipping bolts for future use.

⚠ **WARNING**

Packaging materials can be dangerous to children. Dispose all packaging material (plastic bags, polystyrene, etc.) out of children's reach.

Untitled-1 19 2017-06-26 3:17:02

Installation

STEP 3 Adjust the levelling feet

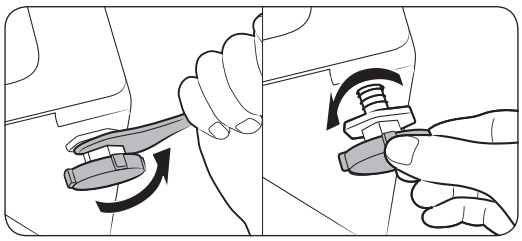

1. Gently slide the washing machine into position. Excessive force may damage the levelling feet.
2. Level the washing machine by manually adjusting the levelling feet.

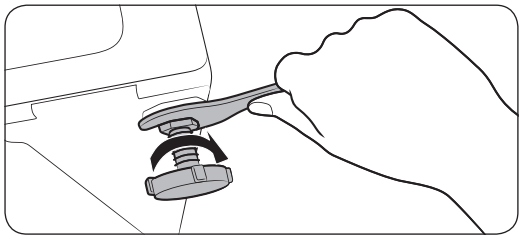

3. When levelling is complete, tighten the nuts using the spanner.

STEP 4 Connect the water hose

The provided hose adaptor may differ with the model. This step guides you through connecting the connector-type adaptor. If you are provided with the screw-type adaptor, go to 7.

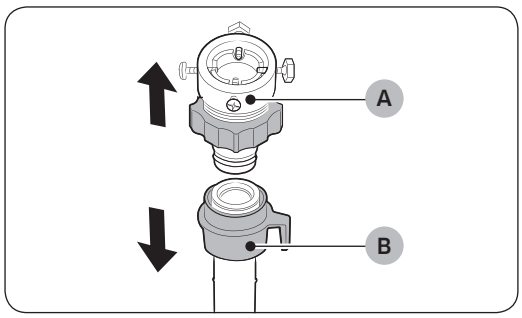

Connect the water hose to the water tap.

1. Remove the adaptor (A) from the water hose (B).

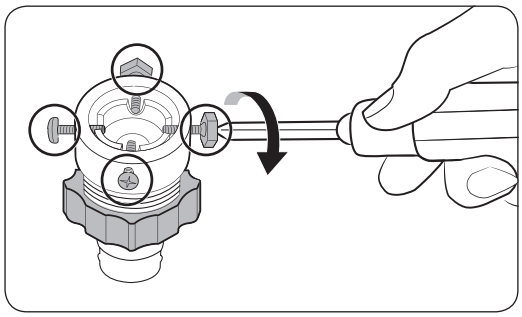

2. Use a Philips screwdriver to loosen four screws on the adaptor.

Untitled-1 20 2017-06-26 3:17:02

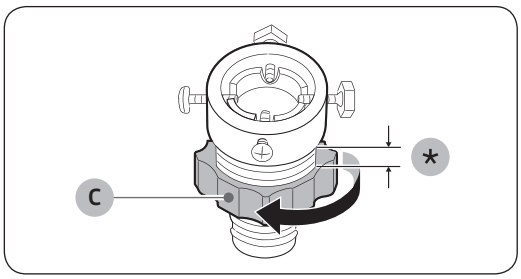

3. Hold the adaptor and turn **part (C)** in the arrow direction to loosen it by 5 mm (*).

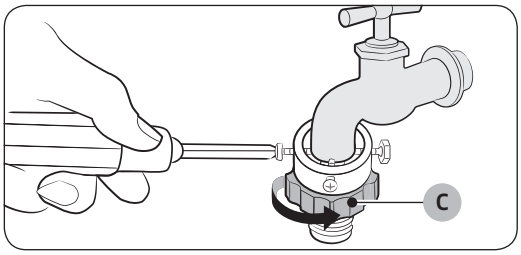

4. Insert the adaptor into the water tap, and tighten the screws while lifting up the adaptor.
5. Turn **part (C)** in the arrow direction to tighten it.

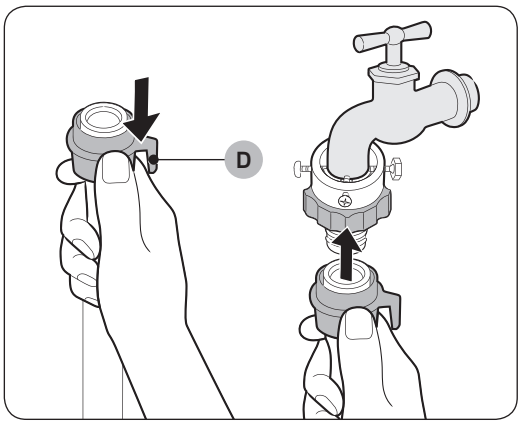

6. While holding down **part (D)**, connect the water hose to the adaptor. Then, release **part (D)**. The hose fits into the adaptor with a clicking sound.

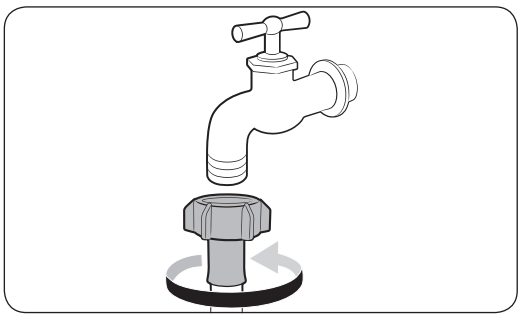

7. If you are using a screw type of water tap, use the provided screw-type adaptor to connect to the water tap as shown.

Untitled-1 21 2017-06-26 3:17:02

Installation

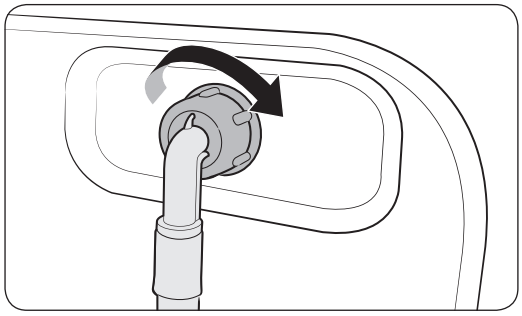

8. Connect the other end of the water hose to the inlet valve on the back of the washing machine. Turn the hose clockwise to tighten.

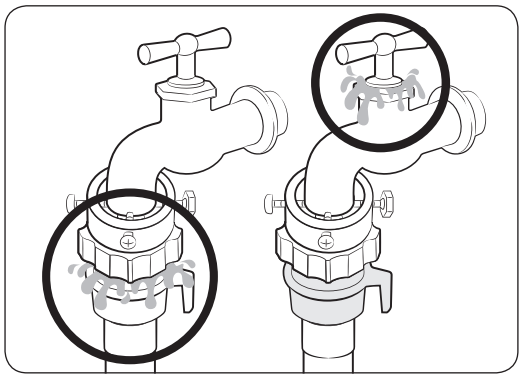

9. Open the water tap and check if there are any leaks around the connection areas. If there are water leaks, repeat the steps above.

⚠ **WARNING**

If there is a water leak, stop operating the washing machine and disconnect from the electrical supply. Then, contact a local Samsung service centre. Otherwise, this may cause electric shock.

⚠ **CAUTION**

Do not stretch the water hose by force. If the hose is too short, replace the hose with a longer, high-pressure hose.

NOTE

- After connecting the water hose to the adaptor, check if it is connected properly by pulling the water hose downwards.
- Use a popular type of water taps. If the tap is square-shaped or too big, remove the spacer ring before inserting the tap into the adaptor.

Untitled-1 22 2017-06-26 3:17:03

For models with an additional hot water inlet:

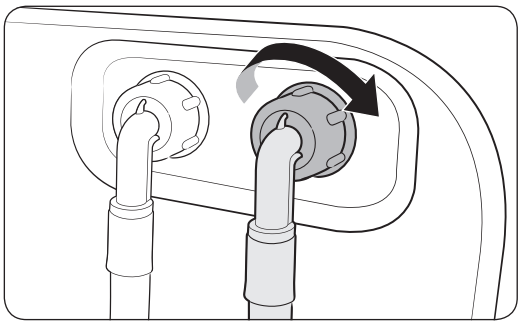

1. Connect the red end of the hot water hose to the hot water inlet on the back of the machine.
2. Connect the other end of the hot water hose to the hot water tap.

Aqua stop hose (applicable models only)

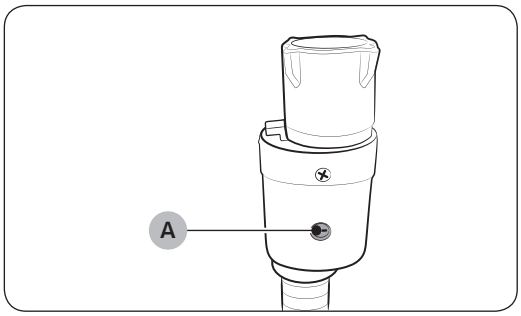

The aqua stop hose alerts users of any water leak risks. It senses the water flow and turns red on the centre **indicator (A)** in case of a leak.

NOTE

The end of the aqua stop hose must be fitted to the water tap and not the machine.

Untitled-1 23 2017-06-26 3:17:03

Installation

STEP 5 Position the drain hose

The drain hose can be positioned in three ways:

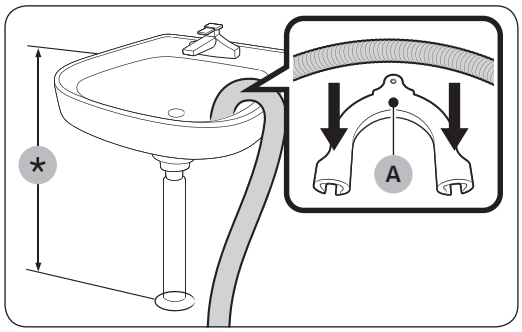

Over the edge of a wash basin

The drain hose must be placed at a height of between 60 cm and 90 cm (*) from the floor. To keep the spout of the drain hose bent, use the supplied **plastic hose guide (A)**. Secure the guide to the wall using a hook to ensure stable drainage.

In a sink drain pipe

The drain pipe must be above the sink siphon so that the end of the hose is at least 60 cm above the floor.

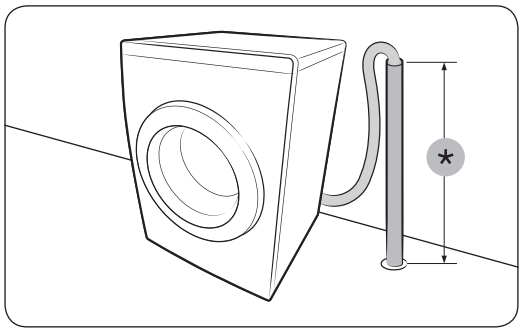

In a drain pipe

The drain pipe should be between 60 cm and 90 cm high (*). It is advisable to use a 65 cm high vertical pipe. Make sure the drain hose is connected to the stand pipe at a slant.

Drain standpipe requirements:

- Minimum diameter of 5 cm
- Minimum carry-away capacity of 60 litres per minute

Untitled-1 24 2017-06-26 3:17:03

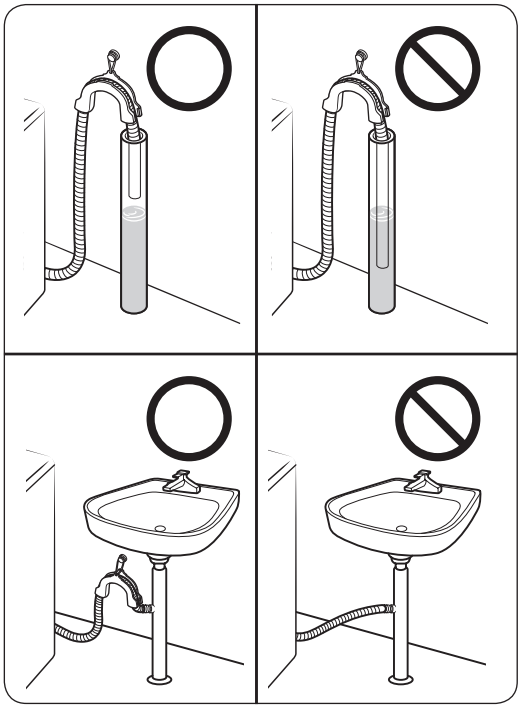

⚠ **CAUTION**

Do not put the drain hose in places of stagnant water or ponding. The water may flow back to the washing machine.

STEP 6 Power on

Plug the power cord into a wall socket featuring an AC 220-240 V / 50 Hz approved electrical outlet protected by a fuse or circuit breaker. Then, press **Power** to turn on the washing machine.

Untitled-1 25 2017-06-26 3:17:03

Before you start

Initial settings

Run Calibration (recommended)

Calibration ensures accurate weight detection by the washing machine. Make sure the drum is empty before running Calibration.

1. Power off, and then power on the washing machine.
2. Hold down Temp. and Delay End simultaneously for 3 seconds to enter Calibration mode. The “Cb” message appears.
3. Press Start/Pause to run the Calibration cycle.
4. The drum will rotate clockwise and counter-clockwise for about 3 minutes.
5. When the cycle is complete, “0” appears on the display and the washing machine will turn off automatically.
6. The washing machine is now ready for use.

Laundry guidelines

STEP 1 Sort

Sort the laundry according to these criteria:

- Care Label: Sort the laundry into cottons, mixed fibres, synthetics, silks, wools, and rayon.
- Colour: Separate whites from colours.
- Size: Mixing different sized items together in the drum improves the washing performance.
- Sensitivity: Wash delicate items separately for pure, new woollen items, curtains, and silk items. Check the labels on the items.

NOTE

Make sure to check the care label on the clothing, and sort them accordingly before starting the wash.

Untitled-1 26 2017-06-26 3:17:04

STEP 2 Empty pockets

Empty all the pockets of your laundry items

- Metal objects such as coins, pins, and buckles on clothing may damage other laundry items as well as the drum.

Turn clothing with buttons and embroideries inside out

- If trousers or jacket zippers are open while washing, the drum may be damaged. Zippers should be closed and fixed with a string.
- Clothing with long strings may become entangled with other clothes. Make sure to tie the strings before starting the wash.

STEP 3 Use a laundry net

- Brassieres (machine washable) must be placed in a laundry net. Metal parts of the brassieres may break through and tear other laundry items.
- Small, light clothing such as socks, gloves, stockings, and handkerchiefs may become caught around the door. Place them inside a fine laundry net.
- Do not wash the laundry net by itself without other laundry. This may cause abnormal vibrations that could move the washing machine and result in injury.

STEP 4 Prewash (if necessary)

Select the Prewash option for the selected cycle if the laundry is heavily soiled. When selecting the Prewash option, make sure to put powder-type detergent into the main wash compartment.

STEP 5 Determine the load capacity

Do not overload the washing machine. Overloading may cause the washing machine to not wash properly. For the load capacity for the type of clothing, see page 36.

NOTE

When washing bedding or bedding covers, the wash time may be lengthened or the spin efficiency may be reduced. For bedding or bedding covers, the recommended maximum spin cycle speed is 800 rpm, and the load capacity is 2.0 kg or less.

CAUTION

If the laundry is unbalanced and the “Ub” information code is displayed, redistribute the load. Unbalanced laundry may reduce the spinning performance.

Untitled-1 27 2017-06-26 3:17:04

Before you start

STEP 6 Apply a proper detergent type

The type of detergent depends on the type of fabric (cotton, synthetic, delicate items, wool), colour, wash temperature, and degree of soiling. Make sure to use the laundry detergent that is designed for automatic washing machines.

NOTE

- Follow the detergent manufacturer's recommendations based on the weight of the laundry, the degree of soiling, and the hardness of the water in your local area. If you are not sure about the water hardness, contact a local water authority.
- Do not use detergent that tends to be hardened or solidified. This detergent may remain after the rinse cycle, blocking the drain outlet.

CAUTION

When washing wool using the **WOOL** cycle, use only a neutral liquid detergent. If used with the **WOOL** cycle, powder detergent may remain on the laundry and discolour the laundry.

Laundry capsules

To get the best results from using laundry capsules, please follow these instructions.

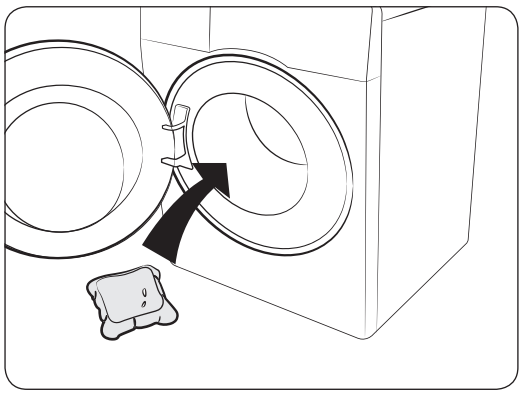

1. Put the capsule in the bottom of the empty drum towards the rear.

Untitled-1 28 2017-06-26 3:17:04

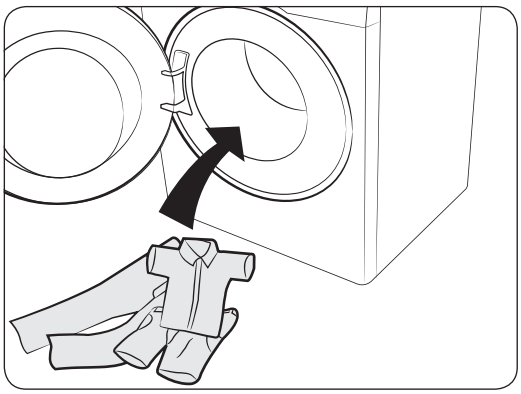

2. Put the laundry in the drum on top of the capsule.

⚠ **CAUTION**

For cycles using cold water or cycles that complete in less than one hour, it is recommended to use a liquid detergent. Otherwise, the capsule may not dissolve completely.

Detergent drawer guidelines

The washing machine provides a three-compartment dispenser: the left compartment for the main wash, the front-right for fabric softeners, and the rear-right for the preliminary wash.

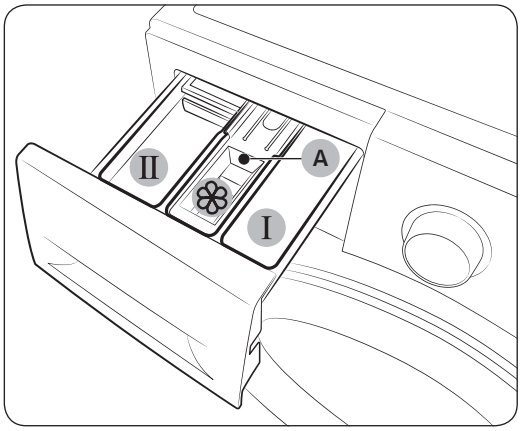

1. I **Prewash compartment**: Apply prewash detergent.
2. II **Main-wash compartment**: Apply main-wash detergent, water softener, soaking detergent, bleach, and/or stain removers.
3. ❀ **Softener compartment**: Apply additives such as fabric softener. Do not exceed the **max line (A)**.

Untitled-1 29 2017-06-26 3:17:05

Before you start

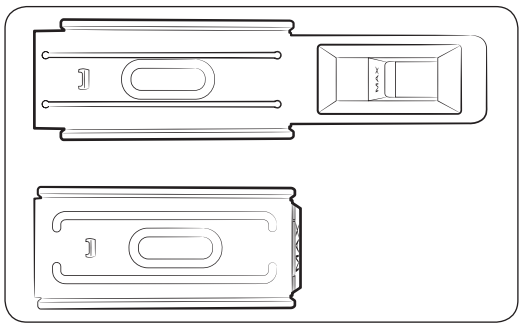

NOTE

The actual appearance of the softener guide may differ with the model.

CAUTION

- Do not open the detergent drawer while the washing machine is operating.
- Do not use the following types of detergent in the drawer:
  - Tablet or capsule types
  - Ball or net types
- To prevent the compartment from clogging, concentrated or highly-enriched agents (fabric softener or detergent) must be diluted with water before being applied.
- When Delay End is selected, do not apply detergent directly into the drum. Otherwise, this may discolour the laundry. Use the detergent drawer when Delay End is selected.

To apply washing agents to the detergent drawer

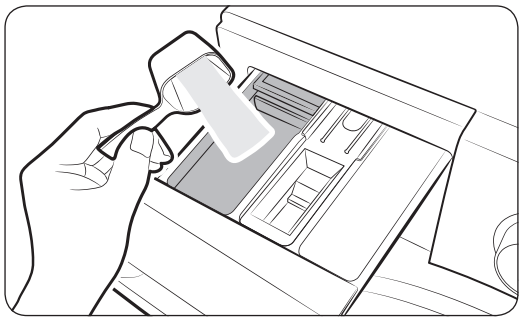

1. Slide open the detergent drawer.
2. Apply laundry detergent to the Ⅱ main-wash compartment as instructed or recommended by the manufacturer. To use liquid detergent, see page 32.

Untitled-1 30 2017-06-26 3:17:05

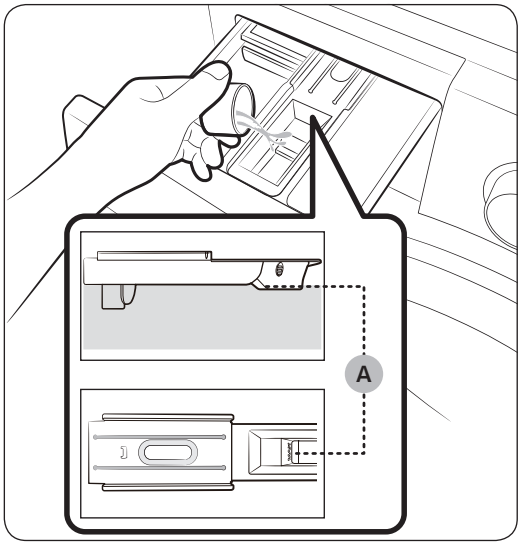

3. Apply fabric softener to the ❀ **softener compartment**. Do not exceed the **max line (A)**.
   Softener is dispensed into the wash during the final rinse.

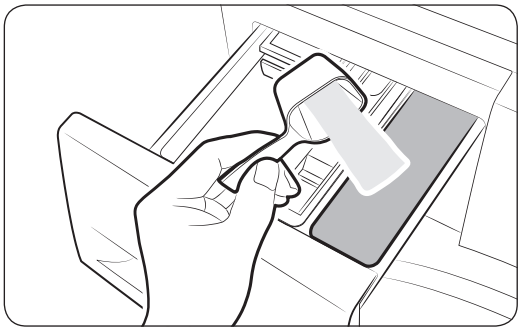

4. If you want to prewash, apply prewash detergent to the Ⅰ **prewash compartment** as instructed or recommended by the manufacturer.
5. Close the detergent drawer.

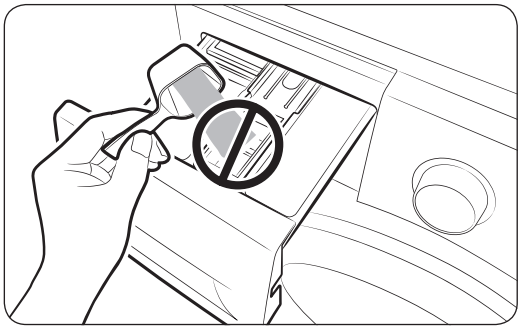

⚠ **CAUTION**

- Do not apply powder detergent to the liquid detergent guide.
- Concentrated fabric softener must be diluted with water before applied.
- Do not apply main-wash detergent to the ❀ **softener compartment**.

Untitled-1 31 2017-06-26 3:17:05

Before you start

To use liquid detergent (applicable models only)

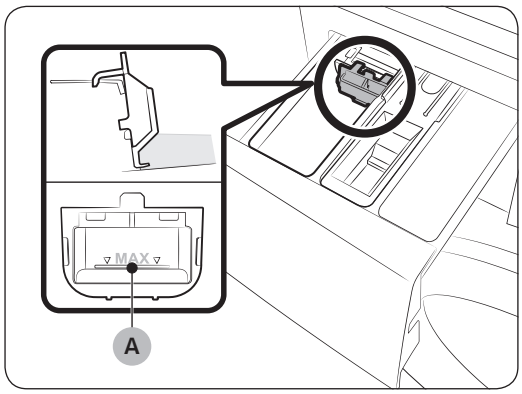

First insert the provided liquid detergent guide in the Ⅱ main-wash compartment. Then, apply liquid detergent to the guide below the marked max line (A).

NOTE

- Insert the liquid detergent guide only after you remove the detergent drawer from the washing machine by pressing release lever (A).
- After a wash, some liquid detergent may remain in the detergent drawer.

CAUTION

- Do not use the Prewash function when you use liquid detergent.
- Remove the liquid detergent guide when you use powder detergent.

Untitled-1 32 2017-06-26 3:17:05

Operations

Control panel

WW9*J5**6**

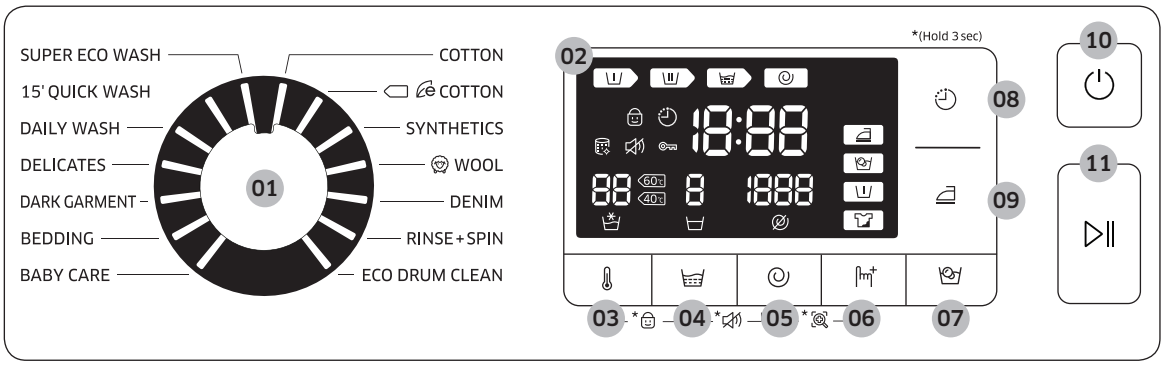

WW8*J5**6**, WW7*J5**6**

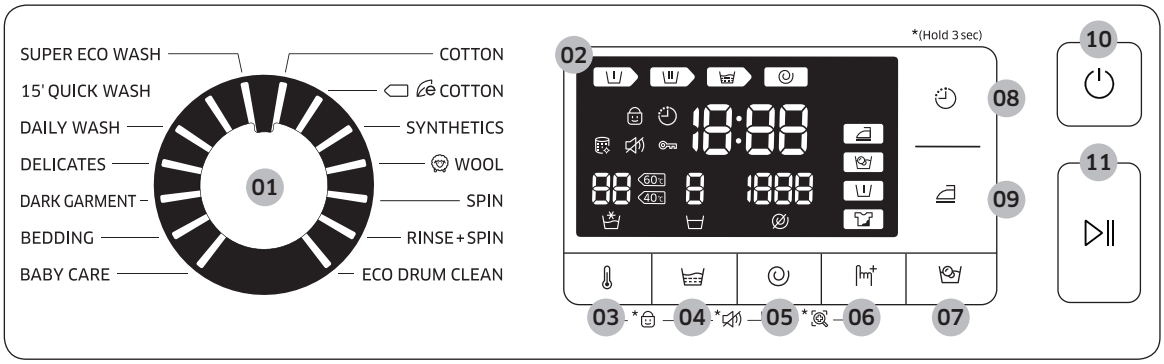

01 Cycle Selector	Turn the dial to select a cycle.
02 Display	The display shows current cycle information and estimated time remaining, or an information code when a problem occurs.
03 Temp.	Press to change the water temperature for the current cycle.
04 Rinse	Press to change the rinse count for the current cycle. You can set the rinse count to a max of 5, depending on the cycle.

Untitled-1 33 2017-06-26 3:17:06

Operations

05 Spin	Press to change the spinning speed for the current cycle. The revolutions per minute (RPM) differs with the model. • **Rinse Hold**: The final rinse process is suspended so that the laundry remains in the water. To unload the laundry, run a drain or spin process. • **No Spin**: The drum does not rotate after the final drain process. • **Spin Only**: To run the Spin Only cycle, press **Spin** for 3 seconds. When the cycle time and spinning speed appear, press **Spin** repeatedly until a desired spinning speed is selected. Then, press **Start/Pause** to start the cycle. The spinning time depends on the selected cycle.
06 Options	Press to select an option from Intensive, and Pre Wash. Press again to deselect. • Availability of the options depends on the cycle.
07 Bubble Soak	Press to activate/deactivate the Bubble Soak function. This function helps remove a wide variety of stubborn stains. • Bubble Soak helps remove a variety of stubborn stains. • With Bubble Soak selected, laundry is thoroughly soaked in water bubbles for effective washing. • Bubble Soak is available with and adds up to 30 minutes to 5 cycles: **COTTON**, **SYNTHETICS**, **BEDDING**, **DAILY WASH**, **BABY CARE**, and **DENIM** (9 kg-models only).
08 Delay End	Delay End lets you set the end time of the current cycle. Based on your settings, the start time of the cycle will be determined by the machine's internal logic. For example, this setting is useful for programming your machine to finish a wash at the time you normally return home from work. • Press to choose a preset unit of hours.
09 Easy Iron	Press to prepare your laundry so that it can be easily ironed by reducing the wrinkles during the spin cycle. • Easy Iron is only available for the following wash cycles: **COTTON**, **COTTON**, **SYNTHETICS**, **DENIM** (9 kg-models only), **SUPER ECO WASH**, **BEDDING**, **DAILY WASH**, **BABY CARE**, and **DARK GARMENT**.
10 Power	Press to turn on/off the washing machine.
11 Start/Pause	Press to start or stop operation.

Untitled-1 34 2017-06-26 3:17:07

Simple steps to start

WW9*J5**6**

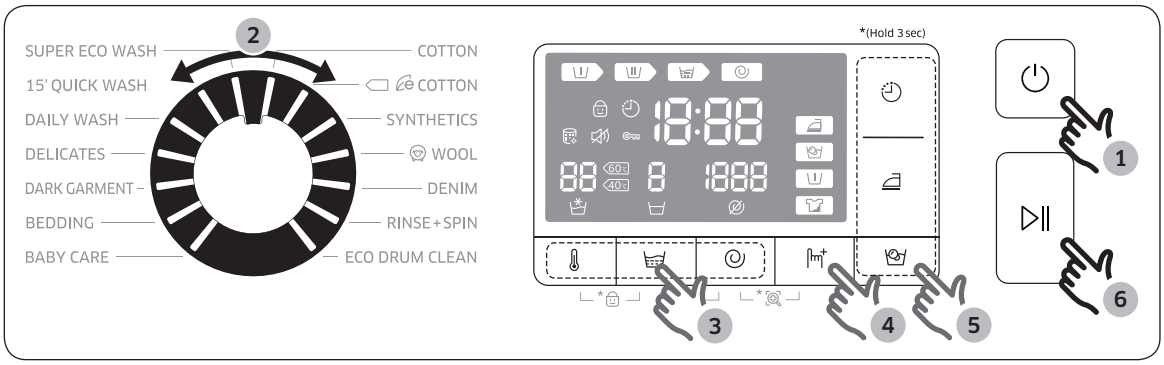

WW8*J5**6**, WW7*J5**6**

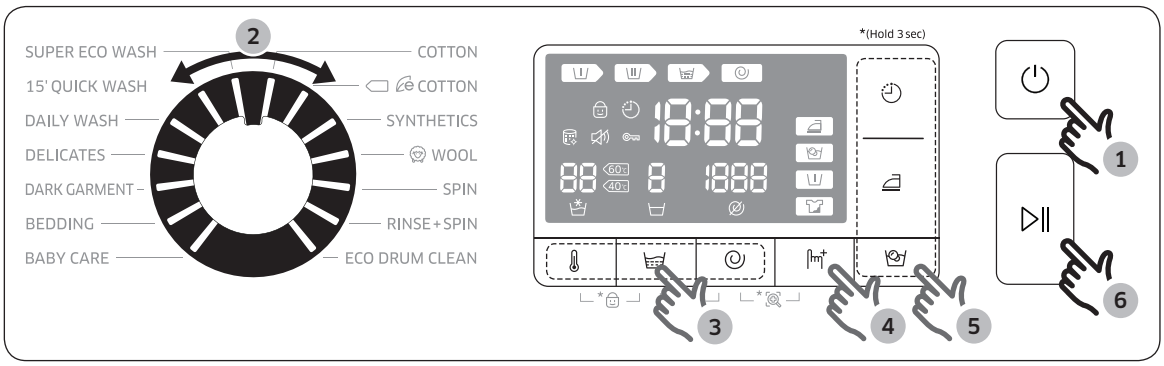

1. Press **Power** to turn on the washing machine.
2. Turn the **Cycle Selector** to select a cycle.
3. Change the cycle settings (**Temp.**, **Rinse**, and **Spin**) as necessary.
4. To add an option, press **Options**. Use the button again to choose a preferred item.
5. The machine provides 3 respective buttons for **Bubble Soak**, **Easy Iron** and **Delay End** for easy access. If you want to use one of these options, press the corresponding button.
6. Press **Start/Pause**.

To change the cycle during operation

1. Press **Start/Pause** to stop operation.
2. Select a different cycle.
3. Press **Start/Pause** again to start the new cycle.

Untitled-1 35 2017-06-26 3:17:07

Operations

Cycle overview

Standard cycles

Cycle	Description & Max load (kg)	
COTTON	• For cottons, bed linens, table linens, underwear, towels, or shirts. The washing time and the rinse count are automatically adjusted according to the load.	MAX
COTTON	• Optimal performance with lower energy for cotton fabrics, bed linens, table linens, underwear, towels, or shirts. For energy saving, the actual washing temperature may be lower than specified.	MAX
SYNTHETICS	• For blouses or shirts that are made of polyester (diolen, trevira), polyamide (perlon, nylon), or the like.	4
WOOL	• Specific for machine-washable wool for loads less than 2.0 kg. • The WOOL cycle features gentle cradling and soaking to protect the wool fibres from shrinkage/distortion. • A neutral detergent is recommended.	2
SPIN (7, 8 kg-models only)	• Featuring an additional spin process to effectively remove moisture from laundry.	MAX
DENIM (9 kg-models only)	• Featuring a higher water level in the main wash and an extra rinse cycle to ensure that no powder detergent remains.	3
RINSE+SPIN	• Featuring an additional rinse process after applying fabric softener to the laundry.	MAX
ECO DRUM CLEAN	• Cleans the drum by removing dirt and bacteria from the drum. • Perform once every 40 washes with no detergent or bleach applied. • Make sure the drum is empty. • Do not use any cleaning agents for cleaning the drum.	–
SUPER ECO WASH	• Low temperature ecobubble cycle helps reduce power consumption.	4

Untitled-1 36 2017-06-26 3:17:07

Cycle	Description & Max load (kg)	
15' QUICK WASH	• For lightly soiled garments in less than 2.0 kg that you want to wash quickly. • Use less than 20 g of detergent. Using more than 20 g of detergent may leave detergent residue. • For liquid detergent, use a max of 20 ml of liquid detergent.	2
DAILY WASH	• For everyday items such as underwear and shirts.	4
DELICATES	• For sheer fabrics, bras, lingerie (silk), and other handwash-only fabrics. • For best performance, use liquid detergent.	2
DARK GARMENT	• Featuring additional rinses and reduced spinning to ensure that the laundry is washed gently and rinsed thoroughly.	4
BEDDING	• For bed spreads, bed sheets, bedding covers, etc. • For best results, wash only 1 type of bedding and make sure the load weighs less than 2.0 kg.	2
BABY CARE	• Featuring a high-temperature wash and extra rinses to help remove the remaining detergent effectively.	4

Untitled-1 37 2017-06-26 3:17:07

Operations

Options

Option		Description
	Pre Wash	• This will add a preliminary washing cycle before the main wash cycle.
	Intensive	• For badly soiled laundry. The operation time for each cycle is longer than normal.

Untitled-1 38 2017-06-26 3:17:08

Delay End

You can set the washing machine to finish your wash automatically at a later time, choosing a delay of between 1 to 24 hours (in 1 hour increments). The hour displayed indicates the time the wash will finish.

1. Select a cycle. Then change the cycle settings if necessary.
2. Press **Delay End** repeatedly until a desired end time is set.
3. Press **Start/Pause**.
   The Delay End indicator blinks and the washing machine tumbles the drum to sense the weight of the load if you have selected the **COTTON** or **COTTON** cycle. Load sensing is preset and enabled only in these 2 cycles. When complete, the machine displays your set time and the timer starts ticking.
4. To cancel the **Delay End**, restart the washing machine by pressing **Power**.

Real-life case

You want to finish a two-hour cycle 3 hours later from now. For this, you add the Delay End option to the current cycle with the 3-hour setting, and press **Start/Pause** at 2:00 p.m. Then, what happens? The washing machine starts operating at 3:00 p.m., and ends at 5:00 p.m. Provided below is the time line for this example.

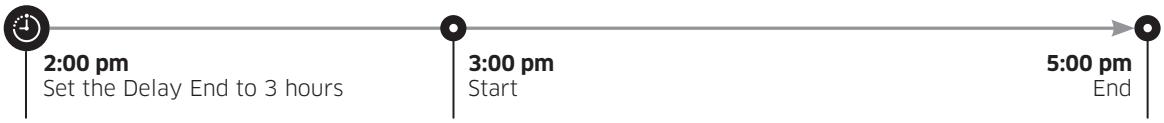

Operations

Untitled-1 39 2017-06-26 3:17:08

Operations

Settings

Child Lock

To prevent accidents by children, Child Lock locks all buttons except for **Power**.

- To set the Child Lock function, hold down **Temp.** and **Rinse** simultaneously for 3 seconds.
- To release the Child Lock function, hold down **Temp.** and **Rinse** simultaneously for 3 seconds.

NOTE

- In the Child Lock state, you must first release the Child Lock if you want to add detergent or laundry.
- Your setting will be kept even after restarting the machine.

Sound On/Off

You can turn on or off the sound from the washing machine. Your setting will be kept even after restarting the machine.

- To mute the sound, hold down **Rinse** and **Spin** simultaneously for 3 seconds.
- To unmute the sound, hold down again for 3 seconds.

Untitled-1 40 2017-06-26 3:17:08

Maintenance

Keep the washing machine clean to prevent deteriorated performance and to preserve its life cycle.

Eco drum clean

Perform this cycle regularly to clean the drum and to remove bacteria.

1. Press **Power** to turn on the washing machine.
2. Turn the **Cycle Selector** to select **ECO DRUM CLEAN**.
3. Press **Start/Pause**.

NOTE

- The water temperature for **ECO DRUM CLEAN** is set to 70 °C, which cannot be changed.
- It is recommended to run the **ECO DRUM CLEAN** cycle once every 40 washes.

CAUTION

Do not use any cleaning agents for cleaning the drum. Chemical residue in the drum deteriorates the washing performance.

ECO DRUM CLEAN reminder

- The **ECO DRUM CLEAN** reminder appears on the main screen once every 40 washes. It is advisable to perform the **ECO DRUM CLEAN** regularly.
- When you first see this reminder, you can ignore the reminder for 6 consecutive washes. From the 7th wash, the reminder no longer appears. However, it appears again on the next 40th wash.

Untitled-1 41 2017-06-26 3:17:08

Maintenance

Smart Check

To enable this function, you must first download the Samsung Smart Washer app at the Play Store or the App Store, and install it on a mobile device featuring a camera function.

The Smart Check function has been optimized for Galaxy & iPhone series (applicable models only).

1. When the washing machine detects an issue to check, an information code appears on the display. To enter Smart Check mode, press and hold Spin and Options simultaneously for 3 seconds.
2. The washing machine starts the self-diagnosis procedure and displays an information code if a problem is detected.
3. Run the Samsung Smart Washer app on your mobile device, and tap Smart Check.
4. Put the mobile device close to the washing machine's display so that the smartphone camera and the washing machine face each other. Then, the information code will be recognized automatically by the app.
5. When the information code is recognized correctly, the app provides detailed information about the problem with applicable solutions.

NOTE

- The function name, Smart Check, may differ depending on the language.
- If there is strong reflected light on the washing machine display, the app may fail to recognize the information code.
- If the app fails to recognize the Smart Check code consecutively, enter the information code manually onto the app screen.

Untitled-1 42 2017-06-26 3:17:08

Emergency drain

In case of a power failure, drain the water inside the drum before taking out the laundry.

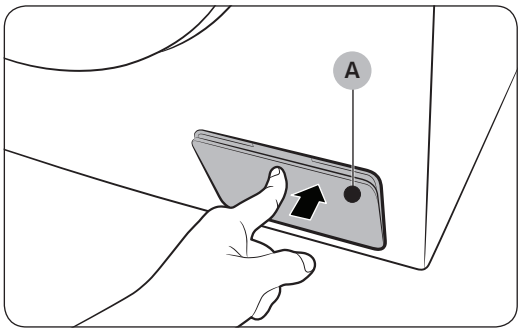

1. Power off and unplug the washing machine from the electrical outlet.
2. Gently press the top area of the **filter cover (A)** to open.

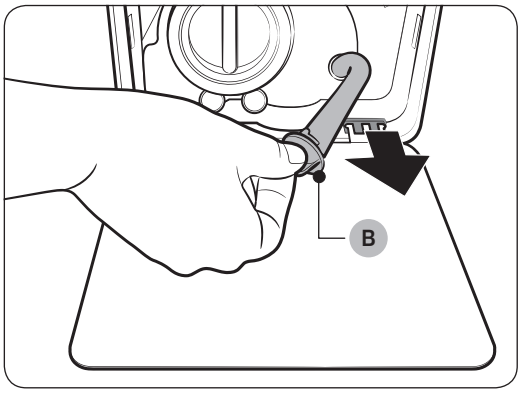

3. Put an empty, spacious container around the cover, and stretch the emergency drain tube to the container while holding the **tube cap (B)**.

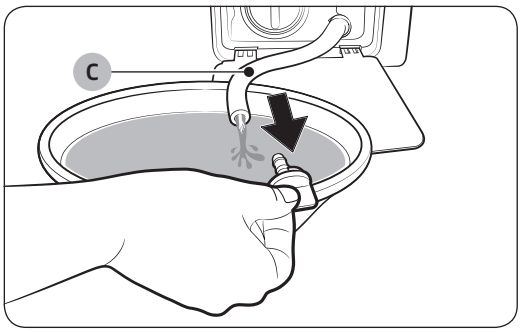

4. Open the tube cap and let water in the **emergency drain tube (C)** flow into the container.
5. When done, close the tube cap, and reinsert the tube. Then, close the filter cover.

NOTE

Use a spacious container because the water in the drum may be more than expected.

Maintenance

Untitled-1 43 2017-06-26 3:17:09

Maintenance

Cleaning

Surface of the washing machine

Use a soft cloth with a nonabrasive household detergent. Do not spray water onto the washing machine.

Mesh filter

Clean the mesh filter of the water hose once or twice a year.

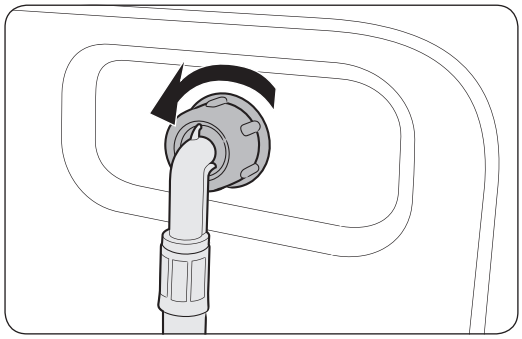

1. Turn off the washing machine, and unplug the power cord.
2. Close the water tap.
3. Loosen and disconnect the water hose from the back of the washing machine. Cover the hose with a cloth to prevent water from gushing out.

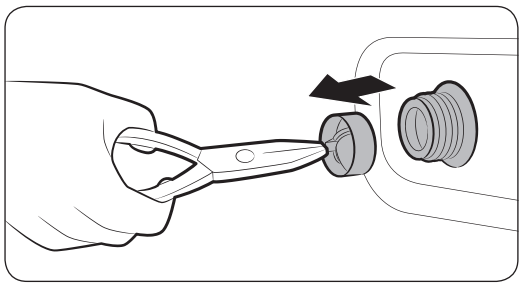

4. Use pliers to pull out the mesh filter from the inlet valve.
5. Submerge the mesh filter deeply in water so that the threaded connector is also submerged.
6. Dry the mesh filter completely in the shade.
7. Reinsert the mesh filter into the inlet valve, and reconnect the water hose to the inlet valve.
8. Open the water tap.

NOTE

If the mesh filter is clogged, an information code of “4C” appears on the screen.

Untitled-1 44 2017-06-26 3:17:09

Pump filter

It is advisable to clean the pump filter 5 or 6 times a year to prevent its clogging. A clogged pump filter may reduce the bubble effect.

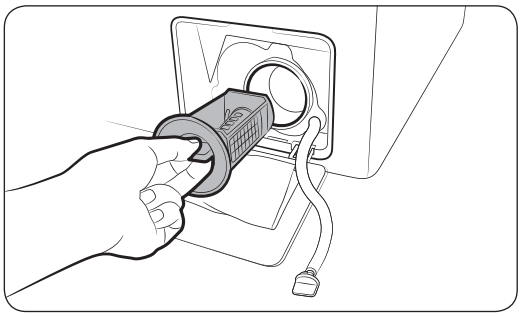

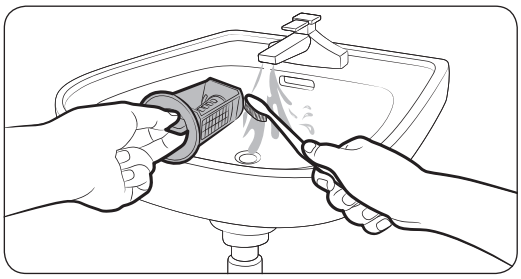

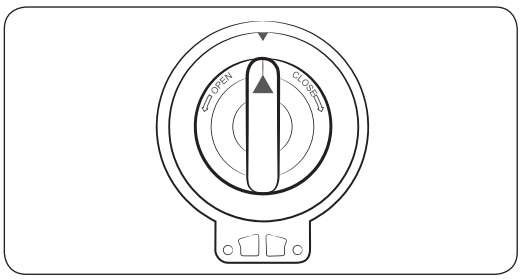

1. Turn off the washing machine, and unplug the power cord.
2. Drain the remaining water inside the drum. See the "**Emergency drain**" section.
3. Gently press the top area of the **filter cover** to open.
4. Turn the pump filter knob to the left, and drain off the remaining water.
5. Clean the pump filter using soft brushes. Make sure the drain pump propeller inside the filter is unclogged.
6. Reinsert the pump filter, and turn the filter knob to the right.

NOTE

If the pump filter is clogged, an information code of "**5C**" appears on the screen.

CAUTION

- Make sure the filter knob is closed properly after cleaning the filter. Otherwise, this may cause a leak.
- Make sure the filter is inserted properly after cleaning it. Otherwise, this may cause an operational failure or a leak.

Untitled-1 45 2017-06-26 3:17:09

Maintenance

Detergent drawer

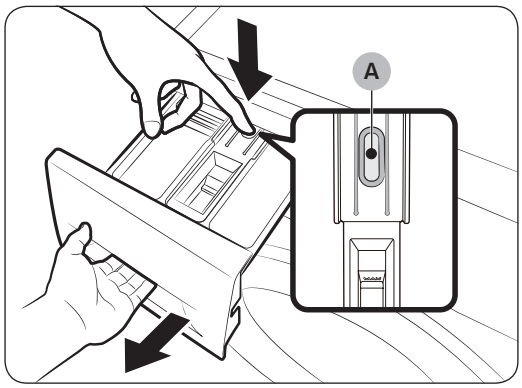

1. While holding down the **release lever (A)** inside the drawer, slide open the drawer.
2. Remove the release lever and the liquid detergent guide from the drawer.

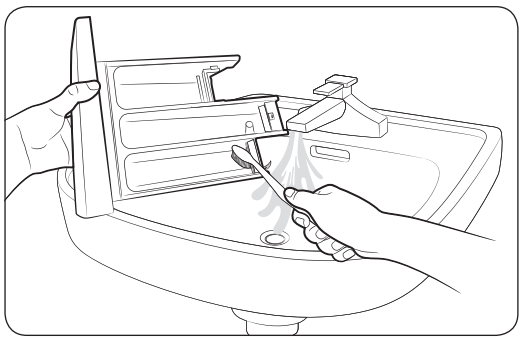

3. Clean the drawer components in flowing water using a soft brush.

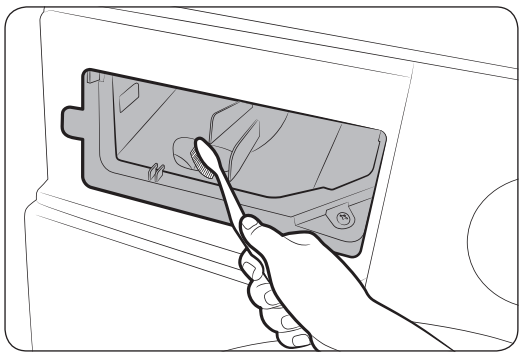

4. Clean the drawer recess using a soft brush.
5. Reinsert the release lever and the liquid detergent guide to the drawer.
6. Slide the drawer inward to close it.

NOTE

To remove remaining detergent, perform the **RINSE+SPIN** cycle with the drum being empty.

Untitled-1 46 2017-06-26 3:17:10

Recovery from freezing

The washing machine may freeze when it drops below 0 °C.

1. Turn off the washing machine, and unplug the power cord.
2. Pour warm water over the water tap to loosen the water hose.
3. Disconnect the water hose, and soak it in warm water.
4. Pour warm water into the drum and leave it for about 10 minutes.
5. Reconnect the water hose to the water tap.

NOTE

If the washing machine still doesn't operate normally, repeat the above steps until it operates normally.

Care against an extended time of disuse

Avoid leaving the washing machine unused for an extended time. If this is the case, drain the washing machine and unplug the power cord.

1. Turn the Cycle Selector to select RINSE+SPIN.
2. Empty the drum, and press Start/Pause.
3. When the cycle is complete, close the water tap and disconnect the water hose.
4. Turn off the washing machine, and unplug the power cord.
5. Open the door to let air circulate through the drum.

Untitled-1 47 2017-06-26 3:17:10

Troubleshooting

Checkpoints

If you encounter a problem with the washing machine, first check the table below and try the suggestions.

Problem	Action
Does not start.	• Make sure the washing machine is plugged in. • Make sure the door is properly closed. • Make sure the water taps are open. • Press or tap **Start/Pause** to start the washing machine. • Make sure Child Lock is not activated. • Before the washing machine starts to fill, it will make a series of clicking noises to check the door lock and does a quick drain. • Check the fuse or reset the circuit breaker.
Water supply is insufficient, or no water is supplied.	• Fully open the water tap. • Make sure the door is properly closed. • Make sure the water supply hose is not frozen. • Make sure the water supply hose is not kinked or clogged. • Make sure there is sufficient water pressure.
After a cycle, detergent remains in the detergent drawer.	• Make sure the washing machine is running with sufficient water pressure. • Make sure the detergent is added to the centre of the detergent drawer. • Make sure the rinse cap is inserted properly. • If using granular detergent, make sure the detergent selector is in the upper position. • Remove the rinse cap and clean the detergent drawer.
Excessive vibrations or makes noise.	• Make sure the washing machine is installed on a level, solid floor that is not slippery. If the floor is not level, use the levelling feet to adjust the height of the washing machine. • Make sure the shipping bolts are removed. • Make sure the washing machine is not contacting any other object. • Make sure the laundry load is balanced. • The motor can cause noise during normal operation. • Overalls or metal-decorated clothes can cause noise while being washed. This is normal. • Metal objects such as coins can cause noise. After washing, remove these objects from the drum or filter case.

Untitled-1 48 2017-06-26 3:17:10

Problem	Action
Does not drain and/ or spin.	• Make sure the drain hose is straightened all the way to the drain system. If you encounter a drain restriction, call for service. • Make sure the debris filter is not clogged. • Close the door and press or tap **Start/Pause**. For your safety, the washing machine will not tumble or spin unless the door is closed. • Make sure the drain hose is not frozen or clogged. • Make sure the drain hose is connected to a drain system that is not clogged. • If the washing machine is not supplied with sufficient power, the washing machine temporarily will not drain or spin. As soon as the washing machine regains sufficient power, it will operate normally.
The door does not open.	• Press or tap **Start/Pause** to stop the washing machine. • It may take a few moments for the door lock mechanism to disengage. • The door will not open until 3 minutes after the washing machine has stopped or the power turned off. • Make sure all the water in the drum is drained. • The door may not open if water remains in the drum. Drain the drum and open the door manually. • Make sure the door lock light is off. The door lock light turns off after the washing machine has drained.
Excessive suds.	• Make sure you use the recommended types of detergent as appropriate. • Use high efficiency (HE) detergent to prevent oversudsing. • Reduce the detergent amount for soft water, small loads, or lightly soiled loads. • Non-HE detergent is not recommended.
Cannot apply additional detergent.	• Make sure the remaining amount of detergent and fabric softener is not over the limit.

Untitled-1 49 2017-06-26 3:17:10

Troubleshooting

Problem	Action
Stops.	• Plug the power cord into a live electrical outlet. • Check the fuse or reset the circuit breaker. • Close the door and press **Start/Pause** to start the washing machine. For your safety, the washing machine will not tumble or spin unless the door is closed. • Before the washing machine starts to fill, it will make a series of clicking noises to check the door lock and does a quick drain. • There may be a pause or soak period in the cycle. Wait briefly and the washing machine may start. • Make sure the mesh filter of the water supply hose at the water taps is not clogged. Periodically clean the mesh filter. • If the washing machine is not supplied with sufficient power, the washing machine temporarily will not drain or spin. As soon as the washing machine regains sufficient power, it will operate normally.
Fills with the wrong water temperature.	• Fully open both taps. • Make sure the temperature selection is correct. • Make sure the hoses are connected to the correct taps. Flush water lines. • Make sure the water heater is set to supply a minimum 120 °F (49 °C) hot water at the tap. Also, check the water heater capacity and recovery rate. • Disconnect the hoses and clean the mesh filter. The mesh filter may be clogged. • While the washing machine fills, the water temperature may change as the automatic temperature control feature checks incoming water temperature. This is normal. • While the washing machine fills, you may notice just hot and/or just cold water going through the dispenser when cold or warm temperatures are selected. This is a normal function of the automatic temperature control feature as the washing machine determines the water temperature.
Load is wet at the end of a cycle.	• Use the High or Extra High spin speed. • Use high efficiency (HE) detergent to reduce oversudsing. • Load is too small. Small loads (one or two items) may become unbalanced and not spin completely. • Make sure the drain hose is not kinked or clogged.

Untitled-1 50 2017-06-26 3:17:10

Problem	Action
Leaks water.	• Make sure the door is properly closed. • Make sure all hose connections are tight. • Make sure the end of the drain hose is correctly inserted and secured to the drain system. • Avoid overloading. • Use high efficiency (HE) detergent to prevent oversudsing.
Has odours.	• Excessive suds collect in recesses and can cause foul odours. • Run cleansing cycles to sanitize periodically. • Clean the door seal (diaphragm). • Dry the washing machine interior after a cycle has finished.
No bubbles are seen (Bubbleshot models only).	• Overloading may screen bubbles. • Severely contaminated laundry may not generate bubbles.

If a problem persists, contact a local Samsung service centre.

Untitled-1 51 2017-06-26 3:17:10

Troubleshooting

Information codes

If the washing machine fails to operate, you may see an information code on the screen. Check the table below and try the suggestions.

Code	Action
4C	Water is not supplied. • Make sure the water taps are open. • Make sure the water hoses are not clogged. • Make sure the water taps are not frozen. • Make sure the washing machine is operating with sufficient water pressure. • Make sure that the cold water tap and the hot water tap are properly connected. • Clean the mesh filter as it may be clogged.
4C2	• Make sure the cold water supply hose is firmly connected to the cold water tap. If it is connected to the hot water tap, the laundry may be deformed with some cycles.
5C	Water is not draining. • Make sure the drain hose is not frozen or clogged. • Make sure the drain hose is positioned correctly, depending on the connection type. • Clean the debris filter as it may be clogged. • Make sure the drain hose is straightened all the way to the drain system. • If the information code remains, contact a customer service centre.
dC	Operating the washer with the door open. • Make sure the door is properly closed. • Make sure laundry is not caught in the door.
OC	Water has overflowed. • Restart after spinning. • If the information code remains on the display, contact a local Samsung service centre.
LC, LC1	Check the drain hose. • Make sure the end of the drain hose is placed on the floor. • Make sure the drain hose is not clogged. • If the information code remains, contact a customer service centre.

Untitled-1 52 2017-06-26 3:17:10

Code	Action
Ub	Spinning does not work. • Make sure laundry is spread out evenly. • Make sure the washing machine is on a flat, stable surface. • Redistribute the load. If only one item of clothing needs washing, such as a bathrobe or pair of jeans, the final spin result might be unsatisfactory, and an “Ub” check message will be shown in the display.
3C	Check the motor for operation. • Try restarting the cycle. • If the information code remains, contact a customer service centre.
UC	The electronic control needs to be checked. • Check if power is supplied properly. • If the information code remains, contact a customer service centre.
	Low voltage detected. • Check if the power cord is plugged in. • If the information code remains, contact a customer service centre.
HC	High temperature heating check. • If the information code remains, contact a customer service centre.
1C	The Water Level sensor is not working properly. • Turn the machine off, and restart the cycle. • If the information code remains, contact a customer service centre.
AC	Check communications between main and sub PBAs. • Turn the machine off, and restart the cycle. • If the information code remains, contact a customer service centre.
8C	The MEMS sensor is not working properly. • Turn the machine off, and restart the cycle. • If the information code remains, contact a local Samsung service centre.

Untitled-1 53 2017-06-26 3:17:10

Troubleshooting

Code	Action
AC6	Check communications between the main and the inverter PBAs. • Depending on the state, the machine may automatically returns to normal operation. • Turn the machine off, and restart the cycle. • If the information code remains, contact a local Samsung service centre.

If any information code keeps appearing on the screen, contact a local Samsung service centre.

Untitled-1 54 2017-06-26 3:17:10

Specifications

Fabric care chart

The following symbols provide garment care directions. The care labels include four symbols in this order: washing, bleaching, drying and ironing (and dry cleaning when necessary). The use of symbols ensures consistency among garment manufacturers of domestic and imported items. Follow the care label directions to maximise garment life and reduce laundry problems.

	Resistant material		Do not iron
	Delicate fabric	A	Can be dry cleaned using any solvent
95 95	Item can be washed at 95 °C		Dry clean
60 60	Item can be washed at 60 °C	P	Dry clean with perchloride, lighter fuel, pure alcohol or R113 only
40 40	Item can be washed at 40 °C	F	Dry clean with aviation fuel, pure alcohol or R113 only
30 30	Item can be washed at 30 °C		Do not dry clean
	Hand wash only		Dry flat
	Dry clean only		Can be hung to dry
Cl	Can be bleached in cold water		Dry on clothes hanger
	Do not bleach		Tumble dry, normal heat
	Can be ironed at 200 °C max		Tumble dry, reduced heat
	Can be ironed at 150 °C max		Do not tumble dry
	Can be ironed at 100 °C max		

Untitled-1 55 2017-06-26 3:17:12

Specifications

Protecting the environment

- This appliance is manufactured from recyclable materials. If you decide to dispose of this appliance, please observe local waste disposal regulations. Cut off the power cord so that the appliance cannot be connected to a power source. Remove the door so that animals and small children cannot get trapped inside the appliance.
- Do not exceed the detergent quantities recommended in the detergent manufacturer's instructions.
- Use stain removal products and bleaches before the wash cycle only when strictly necessary.
- Save water and electricity by only washing full loads (the exact amount depends upon the cycle used).

Untitled-1 56 2017-06-26 3:17:12

Specification sheet

“*” Asterisk(s) means variant model and can be varied (0-9) or (A-Z).

Type			Front loading washing machine	
Model name			WW9*J5**6**	
Dimensions			W 600 x D 550 x H 850 (mm)	
Water pressure			50-800 kPa	
Net weight			61.0 kg	
Wash and spin capacity			9.0 kg	
Power consumption	Washing and heating	220 V	2000 W	
		240 V	2400 W	
Spin revolutions			WW9*J55*6** WW9*J54*6**	WW9*J53*6** WW9*J52*6**
			1400 rpm	1200 rpm

Type			Front loading washing machine	
Model name			WW8*J5**6**	
Dimensions			W 600 x D 550 x H 850 (mm)	
Water pressure			50-800 kPa	
Net weight			61.0 kg	
Wash and spin capacity			8.0 kg	
Power consumption	Washing and heating	220 V	2000 W	
		240 V	2400 W	
Spin revolutions			WW8*J55*6** WW8*J54*6**	WW8*J53*6** WW8*J52*6**
			1400 rpm	1200 rpm

Untitled-1 57 2017-06-26 3:17:12

Specifications

Type			Front loading washing machine	
Model name			WW7*J5**6**	
Dimensions			W 600 x D 550 x H 850 (mm)	
Water pressure			50-800 kPa	
Net weight			61.0 kg	
Wash and spin capacity			7.0 kg	
Power consumption	Washing and heating	220 V	2000 W	
		240 V	2400 W	
Spin revolutions			WW7*J55*6** WW7*J54*6**	WW7*J53*6** WW7*J52*6**
			1400 rpm	1200 rpm

NOTE

The design and specifications are subject to change without notice for quality improvement purposes.

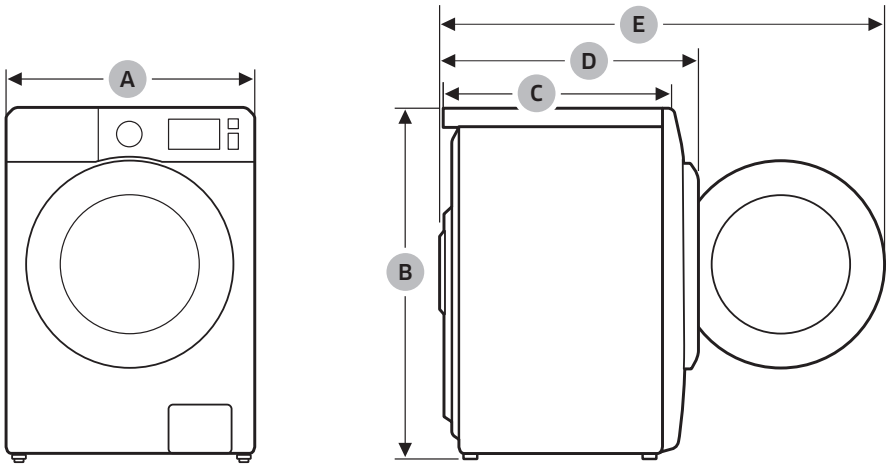

A	600 mm
B	850 mm
C	550 mm
D	630 mm
E	1075 mm

Untitled-1 58 2017-06-26 3:17:13

According to Regulation (EU) No. 1061/2010

“*” Asterisk(s) means variant model and can be varied (0-9) or (A-Z).

Samsung			
Model Name		WW9*J54*6**	WW9*J52*6**
Capacity	kg	9.0	
Energy Efficiency on a scale from D (least efficient) to A+++ (most efficient)		A+++	
Annual energy consumption (It is based on 220 standard washing cycles for standard cotton course at 60 °C and 40 °C at full and partial load, and the consumption of off and left-on modes. Actual energy consumption will depend on how the appliance is used.)	kWh/yr	130	
Energy Consumption			
The standard 60 °C cotton programme at full load	kWh	0.65	
The standard 60 °C cotton programme at partial load	kWh	0.51	
The standard 40 °C cotton programme at partial load	kWh	0.51	
Weighted power consumption of the off-mode.	W	0.48	
Weighted power consumption of the left-on mode.	W	5.00	
Annual water consumption (It is based on 220 standard washing cycles for standard cotton course at 60 °C and 40 °C at full and partial load. Actual water consumption will depend on how the appliance is used.)	L/yr	9400	
Spin efficiency class			
Spin-drying efficiency class on a scale from G (least efficient) to A (most efficient)		A	B
Maximun Spin Speed	rpm	1400	1200
Residual moisture	%	44	53
The COTTON 60 °C and COTTON 40 °C programs are the ‘standard cotton 60 °C program’ and the ‘standard cotton 40 °C program’. They are suitable to clean normally soiled cotton laundry and they are the most efficient (concerning water and energy consumption) for this type of laundry. In these programs the actual water temperature may differ from the declared temperature. Please run Calibration Mode after the installation (refer to the “**Run Calibration (recommended)**” section on page **26**).			
Program duration of the standard program			
The standard 60 °C cotton programme at full load	min	319	
The standard 60 °C cotton programme at partial load	min	289	
The standard 40 °C cotton programme at partial load	min	289	
The duration of the left-on mode (Tl)	min	2	
Airborne acoustical noise emissions expressed in dB(A) re 1 pW and rounded to the nearest integer during the washing and spinning phases for the standard 60 °C cotton programme at full load;			
Wash	dB (A) re 1 pW	50	
Spin	dB (A) re 1 pW	74	
Free Standing			

Untitled-1 59 2017-06-26 3:17:13

Specifications

According to Regulation (EU) No. 1061/2010

"*" Asterisk(s) means variant model and can be varied (0-9) or (A-Z).

Samsung		
Model Name		WW9*J53*6**
Capacity	kg	9.0
Energy Efficiency on a scale from D (least efficient) to A+++ (most efficient)		A+++
Annual energy consumption (It is based on 220 standard washing cycles for standard cotton course at 60 °C and 40 °C at full and partial load, and the consumption of off and left-on modes. Actual energy consumption will depend on how the appliance is used.)	kWh/yr	175
Energy Consumption		
The standard 60 °C cotton programme at full load	kWh	0.86
The standard 60 °C cotton programme at partial load	kWh	0.83
The standard 40 °C cotton programme at partial load	kWh	0.59
Weighted power consumption of the off-mode.	W	0.48
Weighted power consumption of the left-on mode.	W	5.00
Annual water consumption (It is based on 220 standard washing cycles for standard cotton course at 60 °C and 40 °C at full and partial load. Actual water consumption will depend on how the appliance is used.)	L/yr	9400
Spin efficiency class		
Spin-drying efficiency class on a scale from G (least efficient) to A (most efficient)		B
Maximun Spin Speed	rpm	1200
Residual moisture	%	53
The COTTON 60 °C and COTTON 40 °C programs are the 'standard cotton 60 °C program' and the 'standard cotton 40 °C program'. They are suitable to clean normally soiled cotton laundry and they are the most efficient (concerning water and energy consumption) for this type of laundry. In these programs the actual water temperature may differ from the declared temperature. Please run Calibration Mode after the installation (refer to the "**Run Calibration (recommended)**" section on page **26**).		
Program duration of the standard program		
The standard 60 °C cotton programme at full load	min	280
The standard 60 °C cotton programme at partial load	min	220
The standard 40 °C cotton programme at partial load	min	180
The duration of the left-on mode (Tl)	min	2
Airborne acoustical noise emissions expressed in dB(A) re 1 pW and rounded to the nearest integer during the washing and spinning phases for the standard 60 °C cotton programme at full load;		
Wash	dB (A) re 1 pW	62
Spin	dB (A) re 1 pW	76
Free Standing		

Untitled-1 60 2017-06-26 3:17:13

According to Regulation (EU) No. 1061/2010

“*” Asterisk(s) means variant model and can be varied (0-9) or (A-Z).

Samsung			
Model Name		WW8*J54*6**	WW8*J52*6**
Capacity	kg	8.0	
Energy Efficiency on a scale from D (least efficient) to A+++ (most efficient)		A+++	
Annual energy consumption (It is based on 220 standard washing cycles for standard cotton course at 60 °C and 40 °C at full and partial load, and the consumption of off and left-on modes. Actual energy consumption will depend on how the appliance is used.)	kWh/yr	116	
Energy Consumption			
The standard 60 °C cotton programme at full load	kWh	0.54	
The standard 60 °C cotton programme at partial load	kWh	0.48	
The standard 40 °C cotton programme at partial load	kWh	0.48	
Weighted power consumption of the off-mode.	W	0.48	
Weighted power consumption of the left-on mode.	W	5.00	
Annual water consumption (It is based on 220 standard washing cycles for standard cotton course at 60 °C and 40 °C at full and partial load. Actual water consumption will depend on how the appliance is used.)	L/yr	8100	
Spin efficiency class			
Spin-drying efficiency class on a scale from G (least efficient) to A (most efficient)		A	B
Maximun Spin Speed	rpm	1400	1200
Residual moisture	%	44	53
The COTTON 60 °C and COTTON 40 °C programs are the ‘standard cotton 60 °C program’ and the ‘standard cotton 40 °C program’. They are suitable to clean normally soiled cotton laundry and they are the most efficient (concerning water and energy consumption) for this type of laundry. In these programs the actual water temperature may differ from the declared temperature. Please run Calibration Mode after the installation (refer to the “**Run Calibration (recommended)**” section on page **26**).			
Program duration of the standard program			
The standard 60 °C cotton programme at full load	min	319	
The standard 60 °C cotton programme at partial load	min	259	
The standard 40 °C cotton programme at partial load	min	259	
The duration of the left-on mode (Tl)	min	2	
Airborne acoustical noise emissions expressed in dB(A) re 1 pW and rounded to the nearest integer during the washing and spinning phases for the standard 60 °C cotton programme at full load;			
Wash	dB (A) re 1 pW	49	
Spin	dB (A) re 1 pW	74	
Free Standing			

Untitled-1 61 2017-06-26 3:17:13

Specifications

According to Regulation (EU) No. 1061/2010

"*" Asterisk(s) means variant model and can be varied (0-9) or (A-Z).

Samsung			
Model Name		WW8*J55*6**	WW8*J53*6**
Capacity	kg	8.0	
Energy Efficiency on a scale from D (least efficient) to A+++ (most efficient)		A+++	
Annual energy consumption (It is based on 220 standard washing cycles for standard cotton course at 60 °C and 40 °C at full and partial load, and the consumption of off and left-on modes. Actual energy consumption will depend on how the appliance is used.)	kWh/yr	166	
Energy Consumption			
The standard 60 °C cotton programme at full load	kWh	0.85	
The standard 60 °C cotton programme at partial load	kWh	0.73	
The standard 40 °C cotton programme at partial load	kWh	0.56	
Weighted power consumption of the off-mode.	W	0.48	
Weighted power consumption of the left-on mode.	W	5.00	
Annual water consumption (It is based on 220 standard washing cycles for standard cotton course at 60 °C and 40 °C at full and partial load. Actual water consumption will depend on how the appliance is used.)	L/yr	8100	
Spin efficiency class			
Spin-drying efficiency class on a scale from G (least efficient) to A (most efficient)		B	
Maximun Spin Speed	rpm	1400	1200
Residual moisture	%	53	
The COTTON 60 °C and COTTON 40 °C programs are the 'standard cotton 60 °C program' and the 'standard cotton 40 °C program'. They are suitable to clean normally soiled cotton laundry and they are the most efficient (concerning water and energy consumption) for this type of laundry. In these programs the actual water temperature may differ from the declared temperature. Please run Calibration Mode after the installation (refer to the "**Run Calibration (recommended)**" section on page **26**).			
Program duration of the standard program			
The standard 60 °C cotton programme at full load	min	252	
The standard 60 °C cotton programme at partial load	min	222	
The standard 40 °C cotton programme at partial load	min	182	
The duration of the left-on mode (Tl)	min	2	
Airborne acoustical noise emissions expressed in dB(A) re 1 pW and rounded to the nearest integer during the washing and spinning phases for the standard 60 °C cotton programme at full load;			
Wash	dB (A) re 1 pW	62	
Spin	dB (A) re 1 pW	79	76
Free Standing			

Untitled-1 62 2017-06-26 3:17:13

According to Regulation (EU) No. 1061/2010

“*” Asterisk(s) means variant model and can be varied (0-9) or (A-Z).

Samsung			
Model Name		WW7*J54*6**	WW7*J52*6**
Capacity	kg	7.0	
Energy Efficiency on a scale from D (least efficient) to A+++ (most efficient)		A+++	
Annual energy consumption (It is based on 220 standard washing cycles for standard cotton course at 60 °C and 40 °C at full and partial load, and the consumption of off and left-on modes. Actual energy consumption will depend on how the appliance is used.)	kWh/yr	103	
Energy Consumption			
The standard 60 °C cotton programme at full load	kWh	0.52	
The standard 60 °C cotton programme at partial load	kWh	0.39	
The standard 40 °C cotton programme at partial load	kWh	0.39	
Weighted power consumption of the off-mode.	W	0.48	
Weighted power consumption of the left-on mode.	W	5.00	
Annual water consumption (It is based on 220 standard washing cycles for standard cotton course at 60 °C and 40 °C at full and partial load. Actual water consumption will depend on how the appliance is used.)	L/yr	7400	
Spin efficiency class			
Spin-drying efficiency class on a scale from G (least efficient) to A (most efficient)		B	
Maximun Spin Speed	rpm	1400	1200
Residual moisture	%	53	
The COTTON 60 °C and COTTON 40 °C programs are the ‘standard cotton 60 °C program’ and the ‘standard cotton 40 °C program’. They are suitable to clean normally soiled cotton laundry and they are the most efficient (concerning water and energy consumption) for this type of laundry. In these programs the actual water temperature may differ from the declared temperature. Please run Calibration Mode after the installation (refer to the “**Run Calibration (recommended)**” section on page **26**).			
Program duration of the standard program			
The standard 60 °C cotton programme at full load	min	312	
The standard 60 °C cotton programme at partial load	min	197	
The standard 40 °C cotton programme at partial load	min	197	
The duration of the left-on mode (Tl)	min	2	
Airborne acoustical noise emissions expressed in dB(A) re 1 pW and rounded to the nearest integer during the washing and spinning phases for the standard 60 °C cotton programme at full load;			
Wash	dB (A) re 1 pW	51	
Spin	dB (A) re 1 pW	74	
Free Standing			

Untitled-1 63 2017-06-26 3:17:13

Specifications

According to Regulation (EU) No. 1061/2010

"*" Asterisk(s) means variant model and can be varied (0-9) or (A-Z).

Samsung			
Model Name		WW7*J55*6**	WW7*J53*6**
Capacity	kg	7.0	
Energy Efficiency on a scale from D (least efficient) to A+++ (most efficient)		A+++	
Annual energy consumption (It is based on 220 standard washing cycles for standard cotton course at 60 °C and 40 °C at full and partial load, and the consumption of off and left-on modes. Actual energy consumption will depend on how the appliance is used.)	kWh/yr	153	
Energy Consumption			
The standard 60 °C cotton programme at full load	kWh	0.74	
The standard 60 °C cotton programme at partial load	kWh	0.72	
The standard 40 °C cotton programme at partial load	kWh	0.53	
Weighted power consumption of the off-mode.	W	0.48	
Weighted power consumption of the left-on mode.	W	5.00	
Annual water consumption (It is based on 220 standard washing cycles for standard cotton course at 60 °C and 40 °C at full and partial load. Actual water consumption will depend on how the appliance is used.)	L/yr	7400	
Spin efficiency class			
Spin-drying efficiency class on a scale from G (least efficient) to A (most efficient)		B	
Maximun Spin Speed	rpm	1400	1200
Residual moisture	%	53	
The COTTON 60 °C and COTTON 40 °C programs are the 'standard cotton 60 °C program' and the 'standard cotton 40 °C program'. They are suitable to clean normally soiled cotton laundry and they are the most efficient (concerning water and energy consumption) for this type of laundry. In these programs the actual water temperature may differ from the declared temperature. Please run Calibration Mode after the installation (refer to the "**Run Calibration (recommended)**" section on page **26**).			
Program duration of the standard program			
The standard 60 °C cotton programme at full load	min	252	
The standard 60 °C cotton programme at partial load	min	222	
The standard 40 °C cotton programme at partial load	min	182	
The duration of the left-on mode (Tl)	min	2	
Airborne acoustical noise emissions expressed in dB(A) re 1 pW and rounded to the nearest integer during the washing and spinning phases for the standard 60 °C cotton programme at full load;			
Wash	dB (A) re 1 pW	62	
Spin	dB (A) re 1 pW	79	76
Free Standing			

Untitled-1 64 2017-06-26 3:17:13

Information of main washing cycles

Model	Cycles	Temperature (°C)	Capacity (kg)	Cycle Time (min)	Residual Moisture Content (%)		Water Consumption (L/cycle)	Energy Consumption (kWh/Cycle)
					1400 rpm	1200 rpm		
WW9*J54*6** WW9*J52*6**	COTTON	20	4.5	98	56	59	68	0.27
	COTTON	40	4.5	289	44	53	39	0.51
		60	4.5	289	44	53	39	0.51
			9.0	319	44	53	47	0.65
	SYNTHETICS	40	4.0	158	35	35	68	0.68
WW9*J53*6**	COTTON	20	4.5	95	-	59	68	0.30
	COTTON	40	4.5	180	-	53	39	0.59
		60	4.5	220	-	53	39	0.83
			9.0	280	-	53	47	0.86
	SYNTHETICS	40	4.0	155	-	35	68	0.80
WW8*J54*6** WW8*J52*6**	COTTON	20	4.0	98	56	59	57	0.26
	COTTON	40	4.0	259	44	53	33	0.48
		60	4.0	259	44	53	33	0.48
			8.0	319	44	53	41	0.54
	SYNTHETICS	40	4.0	158	35	35	68	0.68
WW8*J55*6** WW8*J53*6**	COTTON	20	4.0	95	56	59	57	0.29
	COTTON	40	4.0	182	53	53	33	0.56
		60	4.0	222	53	53	33	0.73
			8.0	252	53	53	41	0.85
	SYNTHETICS	40	4.0	155	35	35	68	0.80
WW7*J54*6** WW7*J52*6**	COTTON	20	3.5	98	56	59	50	0.25
	COTTON	40	3.5	197	53	53	31	0.39
		60	3.5	197	53	53	31	0.39
			7.0	312	53	53	36	0.52
	SYNTHETICS	40	4.0	158	35	35	68	0.68
WW7*J55*6** WW7*J53*6**	COTTON	20	3.5	95	56	59	50	0.28
	COTTON	40	3.5	182	53	53	31	0.53
		60	3.5	222	53	53	31	0.72
			7.0	252	53	53	36	0.74
	SYNTHETICS	40	4.0	155	35	35	68	0.80

The values on the table have been measured under the conditions specified in Standard IEC60456/EN60456. Actual values will depend on how the appliance is used.

Untitled-1 65 2017-06-26 3:17:13

Memo

Memo

SAMSUNG

QUESTIONS OR COMMENTS?

COUNTRY	CALL	OR VISIT US ONLINE AT
UK	0330 SAMSUNG (7267864)	www.samsung.com/uk/support
IRELAND (EIRE)	0818 717100	www.samsung.com/ie/support

DC68-03779A-01